Rang.	Comment	Origin	Type	Signal-/TAG-No.	Path
					1
					2
					3
					4
					5
	Ex turbine off	from page no.136/77	0	HS 24201	6
					7
					8
	Trip exp. turbine 2	from page no.134/64	1	US 24200	9
					10
					11
	Shut off valve closed	End position switch	1	GL 24201	12
					13
					14
	Temp. oil tank	Value < Min	1	TL 24261	15
					16
	Seal gas supply	Value < Min1	1	PL 24244	17
					18
	Level oil tank	Level switch < Min1	0	LL 24260	19
					20
					21
					22
	Ex turbine on/off	Check back Signal	1	EH 24210	23
					24
	Oil pump on	Check back signal	1	EH 24263	25
					26
	Shut off valve closed	End position switch	1	GL 24201	27
	Speed expander	Value < Min1	1	SLL 24224	28
	Shut off expander	from page no.127/77	1	HS 24201	29
					30
					31
					32
					33
	Seal gas supply	Value < Min2	1	PLL 24244	34
					35
	Shut off valve closed	End position switch	1	GL 24101	36
					37
					38
					39
	Reset trip exp. turb.2	Reset button OS	1	HS 24200	40
					41
					42
					43
					44
					45
					46
					47
					48

Function

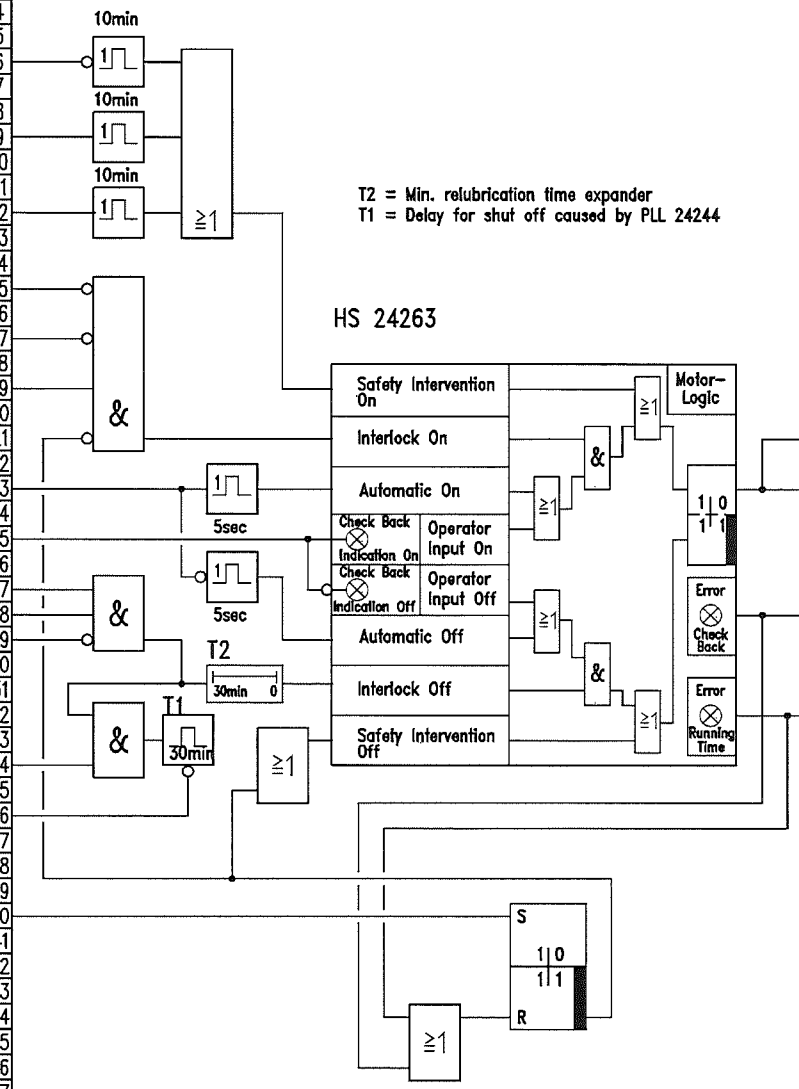

Path	Type	Signal/TAG-No.	Destination	Comment	Rang.
51					
52					
53					
54					
55					
56					
57					
58					
59					
60					
61					
62					
63					
64					
65					
66					
67					
68					
69					
70					
71	0	HS 24263	to page no.137/10	Deriming mode off	
72				HS 24206	
73	1	HS 24263	Signal to MCC	Oil pump P24263 on	
74					
75					
76					
77					
78	1	HS 24263_CB	Alarm OS	"Check back error"	
79					
80					
81					
82	1	HS 24263_RT	Alarm OS	"Running time error"	
83					
84					
85					
86					
87					
88					
89					
90					
91					
92					
93					
94					
95					
96					
97					
98					

JOB NO.	FILE NO.	REV.	DATE	REVISIONS	BY	CHKD.
		Rev3	08.6.07	"as built"	Frohn	Stippich
		Rev2	02.2.06		Frohn	Eichler

PROJECT NAME: ASU KOSICE

PLANT PART: EXPANDER

AIR LIQUIDE

Air Liquide AGS GmbH
Fütingsweg 34
47805 Krefeld

DRAWING NAME: EXPANDER TURBINE 2
AUXILIARY OIL PUMP HS24263

SIZE: A3

FUNKTION DIAGRAM

DRWG. NO.: K70101_139.dwg

PROJ. NO.: K70101

REPLACES: REPLACED BY: BASED:

DATE	17.06.2005
AUTHOR	Frohn
CHECK	Eichler
STD.	

Comment	Origin	Type	Signal-/TAG-No.	Path
Speed expander	Contact > Max1	1	SH 24224_2	3
Speed expander	Contact > Max2	1	SHH 24224_1	5
Quick shut off valve	End position switch	1	GL 24101	9
Generator turb. 2 on	Check back signal	1	EH 24210	25
Trip exp. turbine 2	from page no.134/66	1	US 24200	33
Quick shut down	from page no.136/73	0	HS 24201	35
Quick shut off valve	End position switch	1	GL 24101	39
Reset generator exp.1	Software button	1	US24210_RES	41

Function

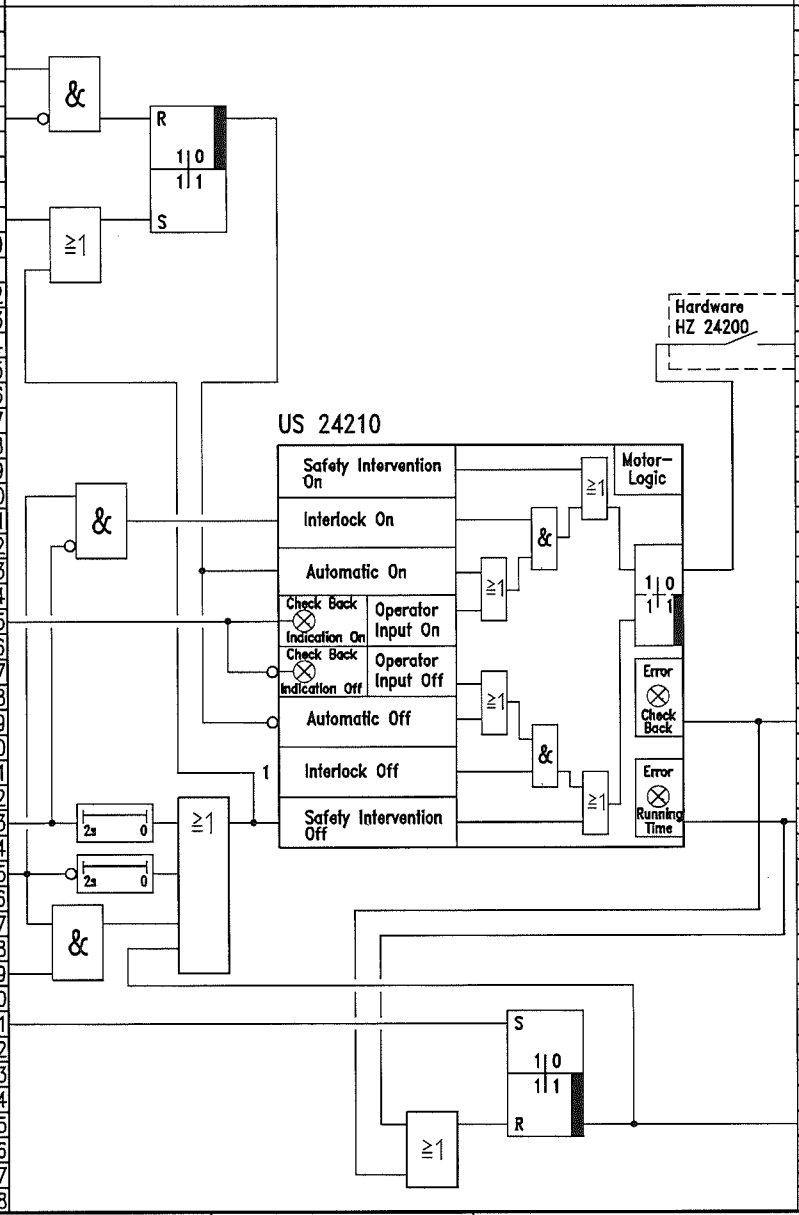

Path	Type	Signal/TAG-No.	Destination	Comment
64	1	US 24210	Signal to MCC	Generator exp. turb.2 on
79	1	US 24210_CB	Alarm OS	"Check back error"
83	1	US 24210_RT	Alarm OS	"Running time error"
95	1	US 24210_fall	to page no.134/47	Fall generator

JOB NO.	FILE NO.	REV.	DATE	REVISIONS	BY	CHKD.
		Rev3	08.6.07	"as built"	Frohn	Stippich
		Rev2	02.2.06		Frohn	Eichler

PROJECT NAME: ASU KOSICE

PLANT PART: EXPANDER

AIR LIQUIDE

Air Liquide AGS GmbH
Fütingsweg 34
47805 Krefeld

DRAWING NAME: EXPANDER TURBINE 2 GENERATOR US24210

SIZE: A3 | FUNKTION DIAGRAM

DRWG. NO.: K70101_140.dwg

PROJ. NO.: K70101

REPLACES: | REPLACED BY: | BASED:

DATE: 17.06.2005
AUTHOR: Frohn
CHECK: Eichler
STD.:

Comment	Origin	Type	Signal-/TAG-No.	Path	Function	Path	Type	Signal/TAG-No.	Destination	Comment
				1		51				
				2		52				
				3		53				
				4		54				
				5		55				
				6		56				
				7		57				
				8		58				
				9		59				
				10		60				
				11		61				
				12		62				
				13		63				
				14		64				
				15		65				
				16		66				
				17		67				
				18		68				
				19		69				
				20		70				
				21		71				
				22		72				
				23		73				
				24		74				
				25		75				
				26		76				
				27		77				
				28		78				
				29		79				
				30		80				
				31		81				
				32		82				
				33		83				
				34		84				
				35		85				
				36		86				
				37		87				
				38		88				
				39		89				
				40		90				
				41		91				
				42		92				
				43		93				
				44		94				
				45		95				
				46		96				
				47		97				
				48		98				

JOB NO.	FILE NO	REV.	DATE	REVISIONS	BY	CHKD.
		Rev3	08.6.07	"as built"	Frohn	Stippich
		Rev2	02.2.06		Frohn	Eichler

PROJECT NAME: ASU KOSICE

PLANT PART: EXPANDER

AIR LIQUIDE

Air Liquide AGS GmbH
Fütingsweg 34
47805 Krefeld

DRAWING NAME: EXPANDER TURBINE 2 SPARE

SIZE: A3

FUNKTION DIAGRAM

DRWG. NO.: K70101_141.dwg

PROJ. NO.: K70101

REPLACES: REPLACED BY: BASED:

DATE: 17.06.2005
AUTHOR: Frohn
CHECK: Eichler
STD.:

Rang.	Comment	Origin	Type	Signal-/TAG-No.	Path
					1
					2
					3
					4
					5
					6
					7
					8
					9
	Reset trip LAR-pump	Software reset button	1	HS 40000	10
	P401100				11
					12
					13
					14
					15
					16
					17
					18
					19
					20
	Trip cold box	from page no.101/75	1	US 20000_dyn	21
					22
	Fail pump	from page no.144/94	1	HS 40100_fail	23
					24
	Bearing temp.	Value < Min2	1	TLL 40140	25
					26
	Bearing temp.	Value < Min2	1	TLL 40141	27
					28
	Bearing temp.	Value > Max2	1	THH 40141	29
					30
	Motor temp.	Contact > Max2	0	THH 40142	31
					32
	Sump Car columne	Value < Min2	1	LLL40053	33
					34
	Electrical fail	Contact	0	EA 40100	35
	frequency converter				36
					37
	ESD P40100	ESD relay	1	HA 40000_1	38
					39
					40
	LAR-pump P40100 on	Check Back signal	1	EH 40100	41
					42
	LAR behind P40100	Value < Min2	1	PLL 40170	43
					44
					45
					46
					47
					48

Function

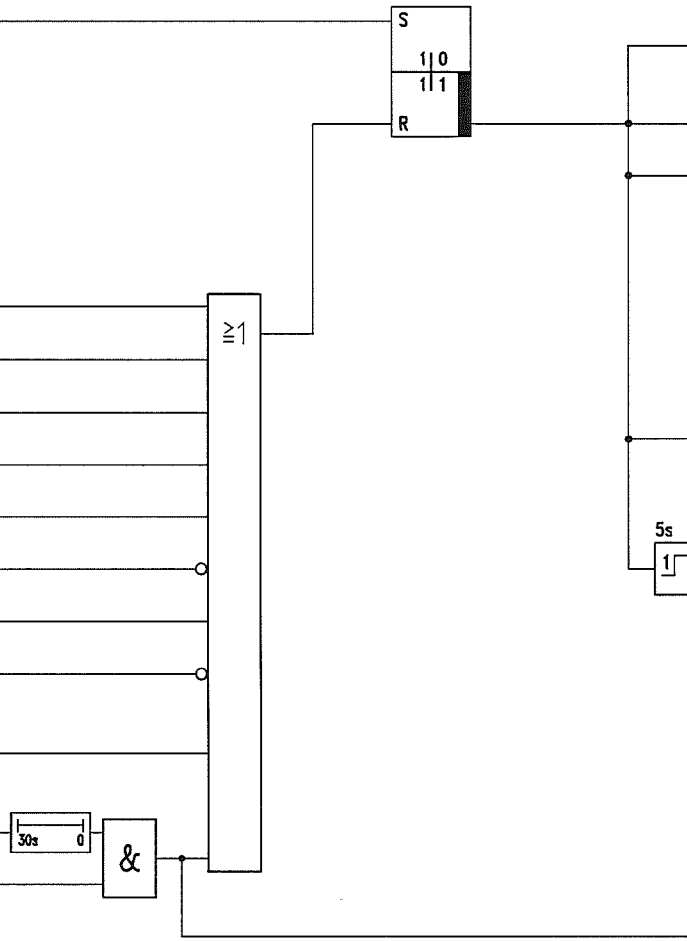

Path	Type	Signal/TAG-No.	Destination	Comment	Rang.
51					
52					
53					
54					
55					
56					
57					
58					
59					
60					
61	1	UA 40100	Alarm OS	"Trip LAR-pump P40100"	
62					
63					
64	1	US 40100	to page no. 144/46	Trip LAR-pump P40100	
65					
66	1	US 40100	to page no. 143/7	Start conditions	
67					
68					
69					
70					
71					
72					
73					
74					
75					
76	1	US 40100			
77					
78					
79					
80					
81	1	US 40100_dyn	to page no. 145/39	HS40110 off	
82					
83					
84					
85	1	US 40100_dyn	tp page no.146a/14		
86					
87					
88					
89					
90					
91					
92					
93					
94					
95	1	PALL 40170	Alarm OS	"Pump kavitated"	
96					
97					
98					

JOB NO.	FILE NO	REV.	DATE	REVISIONS	BY	CHKD.
		Rev3	08.6.07	"as built"	Frohn	Stippich
		Rev2	02.2.06		Frohn	Eichler

PROJECT NAME: ASU KOSICE

PLANT PART: ARGON

AIR LIQUIDE

Air Liquide AGS GmbH
Fütingsweg 34
47805 Krefeld

DRAWING NAME: ARGON PUMP P40100 TRIP US40100

SIZE: A3

FUNKTION DIAGRAM

DRWG. NO.: K70101_142.dwg

PROJ. NO.: K70101

REPLACES: REPLACED BY: BASED:

DATE: 17.06.2005
AUTHOR: Frohn
CHECK: Eichler
STD.:

Comment	Origin	Type	Signal-/TAG-No.	Path
				1
				2
				3
				4
Start cool down	Software switch	1	HS 40101	5
				6
Trip LAr-pump	from page no.142/66	1	US 40100	7
				8
				9
				10
Bearing temp.	Value < Min1	1	TL 40140	11
				12
Bearing temp.	Value < Min1	1	TL 40141	13
				14
Bearing temp.	Value > Max1	1	TH 40141	15
				16
PV 40170 open	Y > 50%	1	UY 40170_50	17
				18
HV 40110 closed	from page no.145/69	0	HS 40110	19
				20
Cool down pump	Value < Min	1	TL 40130	21
				22
				23
				24
				25
				26
				27
				28
				29
				30
				31
				32
				33
				34
				35
LAr-pump on	Check back signal	1	EH 40100	36
				37
				38
				39
				40
				41
				42
				43
				44
Start pump	Software push button	1	HS 40101_S	45
				46
Level sump CAr col.1	Value < Min	1	LL40053	47
				48

Function

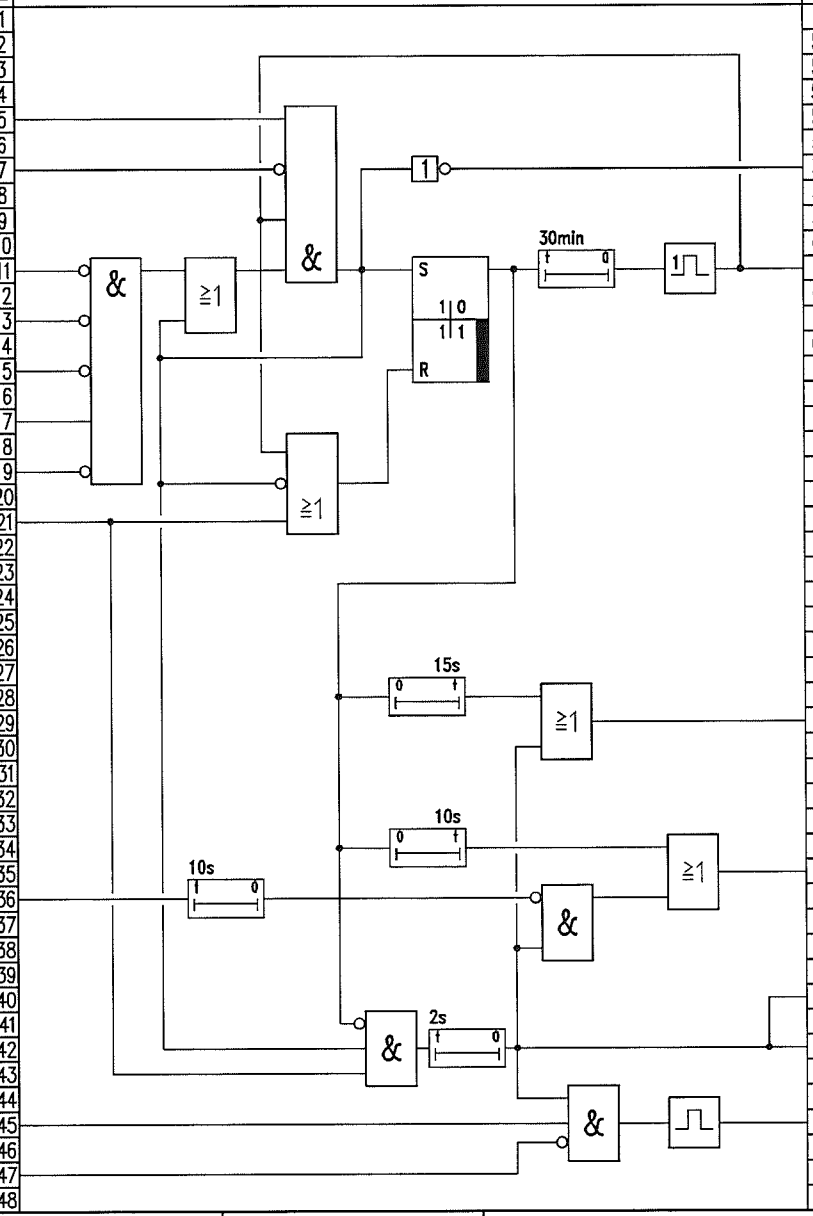

Path	Type	Signal/TAG-No.	Destination	Comment
51				
52				
53				
54				
55				
56				
57	1	UL 40100	to page no.144/26	LAr-pump off from seq.
58				
59				
60				
61	1	TAH 40130	Alarm OS	"Cool down seq. fault"
62				
63				
64				
65				
66				
67				
68				
69				
70				
71				
72				
73				
74				
75				
76				
77				
78				
79	1	UH 40110	to page no. 145/27	Open HV 40110
80				
81				
82				
83				
84				
85	1	LIC 40053_Y60	to page no. 146/14	
86				
87				
88				
89				
90	1	UOH 40101	Monitoring OS	"LAr-Pump ready to
91				start"
92	1	US 40101	to page no. 144/18	Ready to start
93				
94				
95	1	UH 40100	to page no. 144/20	LAr-pump on from
96				sequence
97				
98				

JOB NO.	FILE NO	REV.	DATE	REVISIONS	BY	CHKD.
		Rev3	08.6.07	"as built"	Frohn	Stippich
		Rev2	02.2.06		Frohn	Eichler

PROJECT NAME: ASU KOSICE

PLANT PART: ARGON

AIR LIQUIDE

Air Liquide AGS GmbH
Fütingsweg 34
47805 Krefeld

DRAWING NAME:
ARGON PUMP P40100
START SEQUENCE US40101

SIZE: A3

FUNKTION DIAGRAM

DRWG. NO.: K70101_143.dwg

PROJ. NO.: K70101

REPLACES: REPLACED BY: BASED:

DATE: 17.06.2005
AUTHOR: Frohn
CHECK: Eichler
STD.:

Comment	Origin	Type	Signal-/TAG-No.	Path
Ready to start	from page no.143/92	1	US 40101	18
Pump on from seq.	from page no.143/95	1	UH 40100	20
LAr-pump on	Check back signal	1	EH 40100	22
Pump off from seq.	from page no.143/57	1	UL 40100	26
Reset LAr-Pump	Software button	1	HS 40100_RES	40
FreqC LAr-p. fault	Contact	0	EA 40100	44
Trip LAr-Pump	from page no.142/64	1	US 40100	46

Function

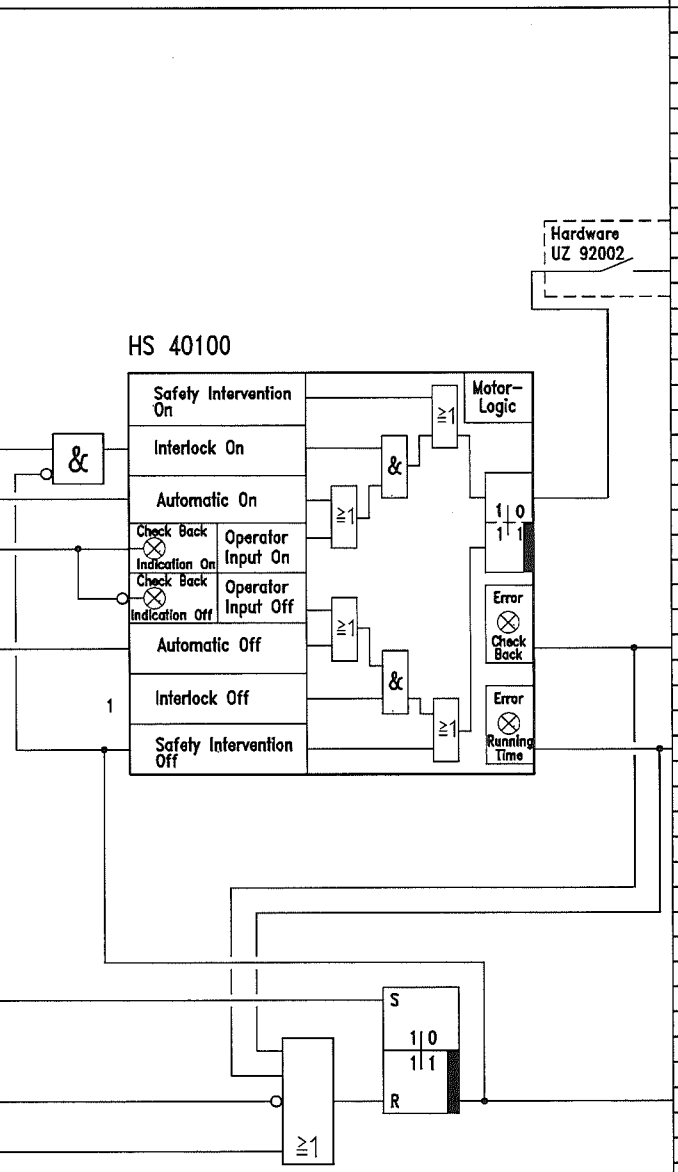

Path	Type	Signal/TAG-No.	Destination	Comment
61	1	HS 40100	Signal to MCC	Frequency converter
62				LAr-pump P40100 on
76	1	HS 40100_CB	Alarm OS	"Check back error"
80	1	HS 40100_RT	Alarm OS	"Running time error"
94	1	HS 40100_fail	to page no. 142/23	LAr-pump fail

JOB NO.	FILE NO	REV	DATE	REVISIONS	BY	CHKD.
		Rev3	08.6.07	"as built"	Frohn	Stippich
		Rev2	02.2.06		Frohn	Eichler

PROJECT NAME: ASU KOSICE

PLANT PART: ARGON

AIR LIQUIDE

Air Liquide AGS GmbH
Fütingsweg 34
47805 Krefeld

DRAWING NAME: LAR PUMP P40100 HS 40100

SIZE: A3

FUNKTION DIAGRAM

DRWG. NO.: K70101_144.dwg

PROJ. NO.: K70101

REPLACES: REPLACED BY: BASED:

DATE: 17.06.2005
AUTHOR: Frohn
CHECK: Eichler
STD.:

Comment	Origin	Type	Signal-/TAG-No.	Path
Open from seqence	From page 143/79	1	UH 40110	27
Trip LAr-pump	from page no.142/81	1	US 40100_dyn	39
Trip coldbox	from page no.101/76	1	US 20000_dyn	41
LAr-pump P40100	Check back signal	1	EH 40100	43

Function

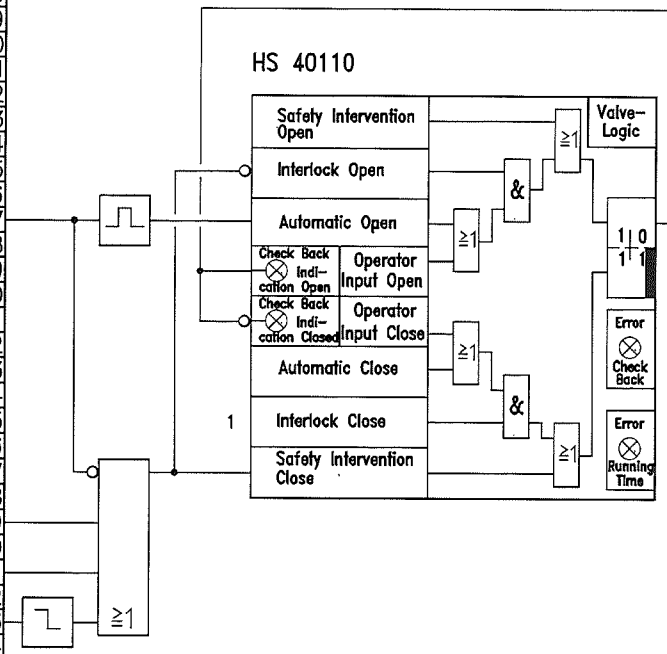

Path	Type	Signal/TAG-No.	Destination	Comment
69	0	US 40110	to page no. 143/19	Start conditions
77	1	US 40110	Solenoid valve	Open valve HV40110
				LAR from K40001

Rev3	08.6.07	"as built"	Frohn	Stippich	
Rev2	02.2.06		Frohn	Eichler	
JOB NO. FILE NO	REV.	DATE	REVISIONS	BY	CHKD.

PROJECT NAME: ASU KOSICE

PLANT PART: ARGON

AIR LIQUIDE

Air Liquide AGS GmbH
Fütingsweg 34
47805 Krefeld

DRAWING NAME: ARGON PUMP P40100
LAR FROM C40001
HS 40110

SIZE: A3

FUNKTION DIAGRAM

DRWG. NO.: K70101_145.dwg

PROJ. NO.: K70101

REPLACES: REPLACED BY: BASED:

DATE: 17.06.2005
AUTHOR: Frohn
CHECK: Eichler
STD.:

Comment	Origin	Type	Signal-/TAG-No.	Path
Sump CAr-column 1	DP-transmitter	E	LT 40053	7
LAr-pump on	Ckeck back signal	1	EH 40100	12
Discharge CLOX pump	Pressure transmitter	E	PT40170	22
LAr-pump i. operation	from page no.143/85	1	P40170_A	29

Function

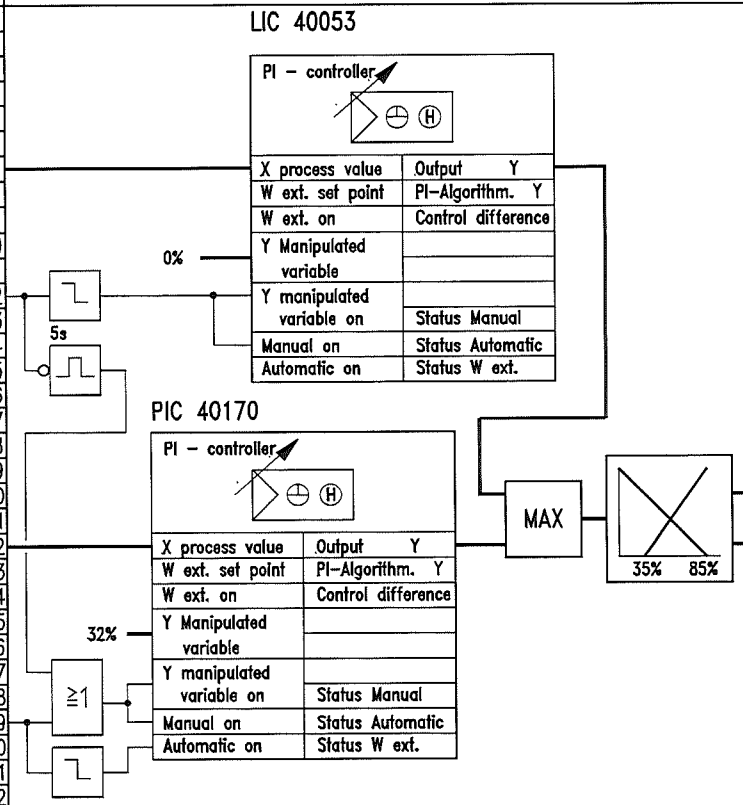

Path	Type	Signal/TAG-No.	Destination	Comment
70	E	UY40170_OUT	to page no.146a/10	Bypass LAr-pump
72	E	UY40170H_OUT	to page no.146a/25	Ext. setpoint

JOB NO.	FILE NO.	REV.	DATE	REVISIONS	BY	CHKD.
		Rev3	08.6.07	"as built"	Frohn	Stippich
		Rev2	02.2.06		Frohn	Eichler

PROJECT NAME: ASU KOSICE

PLANT PART: ARGON

AIR LIQUIDE

Air Liquide AGS GmbH
Fütingsweg 34
47805 Krefeld

DRAWING NAME:
ARGON PUMP P40100
SPEED/LEVEL CONTROL
LIC 40053 / PIC 40170

SIZE A3 — FUNKTION DIAGRAM

DRWG. NO. K70101_146.dwg

PROJ. NO. K70101

REPLACES: REPLACED BY: BASED:

DATE 17.06.2005
AUTHOR Frohn
CHECK Eichler
STD.

Page no. 146
Of 230 Pages

Comment	Origin	Type	Signal-/TAG-No.	Path
Bypass Lar-pump	from page no.146/70	E	UY40170_OUT	10
Trip LAr-pump	from page no.142/85	1	US40100_dyn	14
Ext. Setpoint	from page no.146/72	E	UY40170H_OUT	25

Function

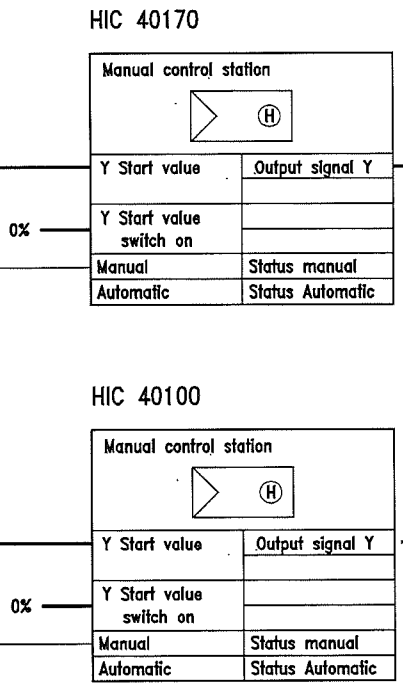

Path	Type	Signal/TAG-No.	Destination	Comment
60	E	PV 40170	Positioner 0-100% = 20-4mA	Control valve Recycled LAR pre product PC 40170
75	E	HC 40100	Frequency converter 0-100% = 4-20mA	Speed control

JOB NO.	FILE NO	REV	DATE	REVISIONS	BY	CHKD.
		Rev3	08.6.07	"as built"	Frohn	Stippich
		Rev2	02.2.06		Frohn	Eichler

PROJECT NAME: ASU KOSICE

PLANT PART: ARGON

AIR LIQUIDE

Air Liquide AGS GmbH
Fütingsweg 34
47805 Krefeld

DRAWING NAME: ARGON PUMP P40100 SPEED/LEVEL CONTROL HIC40170 / HIC 40100

SIZE: A3

FUNKTION DIAGRAM

DRWG. NO.:

PROJ. NO.: K70101

REPLACES: REPLACED BY: BASED:

DATE: 17.06.2005
AUTHOR: Frohn
CHECK: Eichler
STD.:

Rang.	Comment	Origin	Type	Signal-/TAG-No.	Path
					1
					2
					3
					4
					5
					6
					7
					8
					9
	Reset trip pure Ar	Software reset button	1	HS 43000	10
					11
					12
					13
					14
					15
					16
					17
					18
					19
	Trip cold box	from page no.100/84	1	US 20000	20
					21
	Level pure Ar column	Value > Max2	1	LHH 43023	22
					23
	Level pure Ar cond.	Value > Max2	1	LHH 43027	24
					25
	ppm02 in CAr-col.	Value > Max2	1	QHH 40012	26
					27
					28
					29
					30
					31
					32
					33
					34
					35
					36
					37
					38
					39
					40
					41
					42
					43
					44
					45
					46
					47
					48

Function

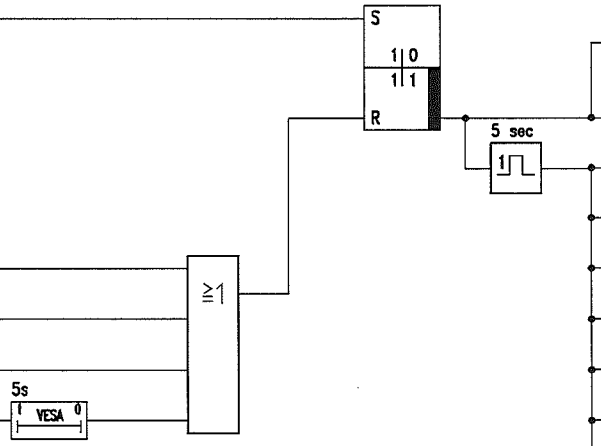

Path	Type	Signal/TAG-No.	Destination	Comment	Rang.
51					
52					
53					
54					
55					
56					
57					
58					
59					
60					
61	1	UA 43000	Alarm OS	"Trip pure Ar column"	
62					
63					
64	1	US 43000	to page no. 148/20	Trip pure Ar column	
65			US 43023	Trip LAR-product	
66	1	US 43000_dyn	FIC 40014	LAR to pure Ar-column	
67			Contr. Manual/Y=0%		
68	1	US 43000_dyn	PDIC 43021	Pure Ar-column	
69			Contr. Manual/Y=0%		
70	1	US 43000_dyn	LIC 43027	Level pure Ar condenser	
71			Contr. Manual/Y=0%		
72	1	US 43000_dyn	LIC 43033	LAR-product to dump	
73			Contr. Manual/Y=0%		
74	1	US 43000_dyn	LIC 43023	LAR-product to storage	
75			Contr. Manual/Y=0%		
76	1	US 43000_dyn	PIC 43022	Pure Ar-column	
77			Contr. on Automatic	Setpoint = 200mbar	
78	1	US 43000_dyn	PIC 43028	Pure Ar-condenser	
79			Contr. on Automatic	Setponit = 1,8bar	
80	1	US 43000_dyn	PIC 40012		
81			Contr. on Automatic		
82					
83					
84					
85					
86					
87					
88					
89					
90					
91					
92					
93					
94					
95					
96					
97					
98					

JOB NO.	FILE NO	REV.	DATE	REVISIONS	BY	CHKD.
		Rev3	08.6.07	"as built"	Frohn	Stippich
		Rev2	02.2.06		Frohn	Eichler

PROJECT NAME: ASU KOSICE

PLANT PART: ARGON

AIR LIQUIDE

Air Liquide AGS GmbH
Fütingsweg 34
47805 Krefeld

DRAWING NAME: PURE ARGON COLUMN TRIP US43000

SIZE: A3

FUNKTION DIAGRAM

DRWG. NO.: K70101_147.dwg

PROJ. NO.: K70101

REPLACES: REPLACED BY: BASED:

DATE: 17.06.2005
AUTHOR: Frohn
CHECK: Eichler
STD.:

Rang.	Comment	Origin	Type	Signal-/TAG-No.	Path
					1
					2
					3
					4
					5
					6
					7
					8
					9
	Reset trip LAr-prod.	Software reset button	1	HS 43023	10
					11
					12
					13
					14
					15
					16
					17
					18
					19
	Trip pure Ar-columne	from page no.147/64	1	US 43000	20
					21
	ppmN2 in LAR-prod.	Value > Max2	1	QHH 43034_2	22
	analyzer				23
					24
					25
	ppmO2 in crude-Ar	Value > Max2	1	QHH 40012	26
	column analyzer				27
					28
					29
	ppmO2 in pure-Ar	Value > Max2	1	QHH 43033	30
	column analyzer				31
					32
					33
					34
	Level B44101	Value > Max2	1	LHH 44105	35
	Pressure B44101	Value > Max2	1	PHH 44105	36
	Overflow B44101	Value < Min	1	TL 44104	37
					38
					39
	Level B44201	Value > Max2	1	LHH 44205	40
	Pressure B44201	Value > Max2	1	PHH 44205	41
	Overflow B44201	Value < Min	1	TL 44204	42
	Trip LP-LAr-Tank	ESD-Relay	1	UA 44010	43
					44
					45
					46
					47
					48

Function

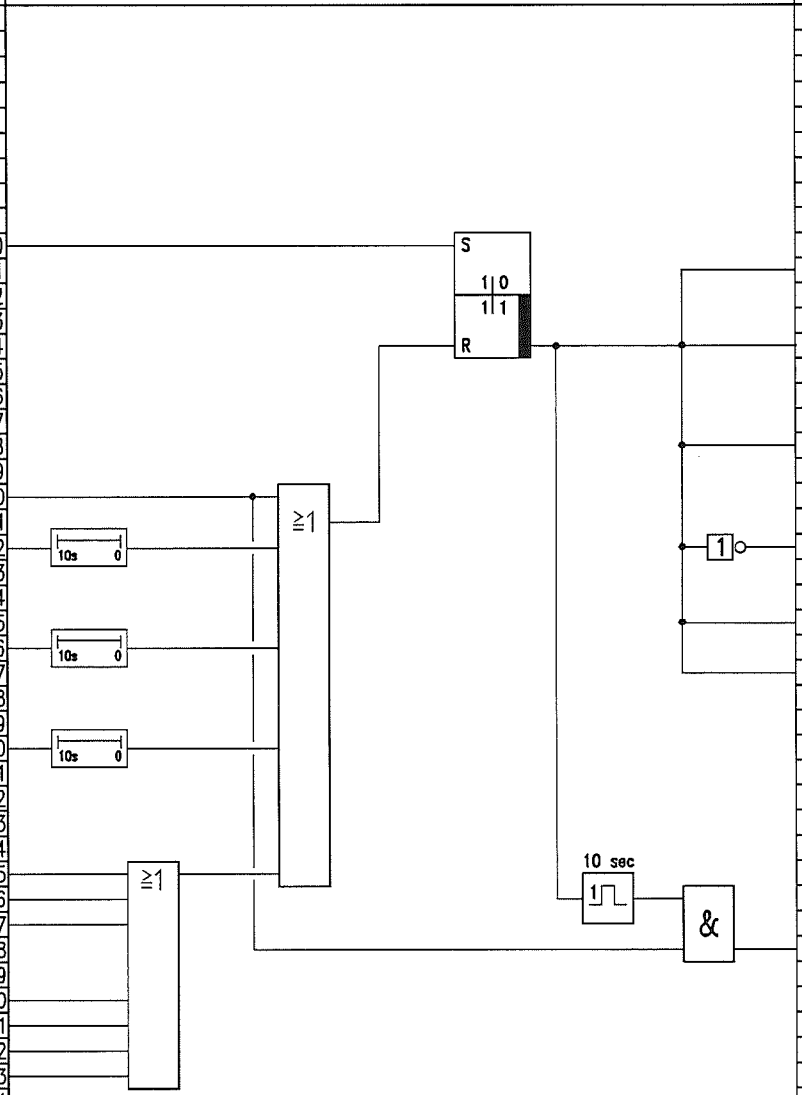

Path	Type	Signal/TAG-No.	Destination	Comment	Rang.
51					
52					
53					
54					
55					
56					
57					
58					
59					
60					
61	1	UA 43023	Alarm OS	"Trip LAr-product"	
62					
63					
64	1	US 43023		Trip LAr-product	
65					
66					
67					
68	1	US 43023	to page no. 149/15	Level pure Ar-column	
69				LIC 43023	
70				Contr. Manual/Y=0%	
71					
72	0	US 43023	Solenoid valve	Close LV 43023	
73			UV 43023		
74					
75	1	US 43023	to page no. 184/22	TIC90008 on "Auto"	
76				Steam to dump vap.	
77	1	US 43023	to page no. 232/20	Open HV 90015	
78					
79					
80					
81					
82					
83					
84					
85					
86					
87					
88	1	US 43023_dyn1	to page no. 149/35	LAR-product to dump	
89				LIC 43033	
90				Contr. on Automatic	
91					
92					
93					
94					
95					
96					
97					
98					

JOB NO.	FILE NO	REV.	DATE	REVISIONS	BY	CHKD.
		Rev3	08.6.07	"as built"	Frohn	Stippich
		Rev2	02.2.06		Frohn	Eichler

PROJECT NAME: ASU KOSICE

PLANT PART: ARGON

AIR LIQUIDE

Air Liquide AGS GmbH
Fütingsweg 34
47805 Krefeld

DRAWING NAME: PURE ARGON COLUMN
TRIP LAR PRODUCT US43023

SIZE: A3

FUNKTION DIAGRAM

DRWG. NO.: K70101_148.dwg

PROJ. NO.: K70101

REPLACES: REPLACED BY: BASED:

DATE: 17.06.2005
AUTHOR: Frohn
CHECK: Eichler
STD.:

Rang.	Comment	Origin	Type	Signal-/TAG-No.	Path
					1
					2
					3
					4
					5
					6
					7
	Sump pure-Ar col.	PD-Transmitter	E	L 43023	8
		0-100%			9
					10
					11
					12
					13
					14
	Trip LAR-product	from page no.148/68	1	US 43023	15
					16
	Trip PAR-column	from page no.147/74	1	US 43000_dyn	17
					18
					19
					20
					21
					22
					23
					24
					25
					26
					27
					28
					29
					30
					31
					32
					33
	Trip PAR-column	from page no.147/72	1	US 43000_dyn	34
	Trip LAR-product	from page no.148/88	1	US 43023_dyn1	35
					36
					37
					38
					39
					40
					41
					42
					43
					44
					45
					46
					47
					48

Function

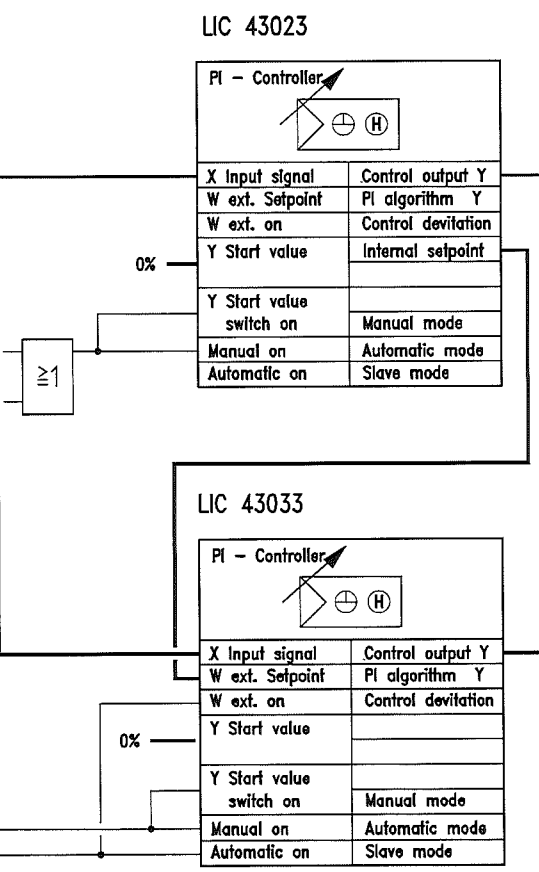

Path	Type	Signal/TAG-No.	Destination	Comment	Rang.
51					
52					
53					
54					
55					
56					
57					
58	E	LV 43023	Positioner 4...20mA	Control valve LV43023	
59			= 0-100%	LAR to storage	
60					
61					
62					
63					
64					
65					
66					
67					
68					
69					
70					
71					
72					
73					
74					
75					
76					
77	E	LV 43033	Positioner 4-20mA	Control valve LV43033	
78			= 0-100%	LAr to dump	
79					
80					
81					
82					
83					
84					
85					
86					
87					
88					
89					
90					
91					
92					
93					
94					
95					
96					
97					
98					

JOB NO.	FILE NO	REV.	DATE	REVISIONS	BY	CHKD.
		Rev3	08.6.07	"as built"	Frohn	Stippich
		Rev2	02.2.06		Frohn	Eichler

PROJECT NAME: ASU KOSICE

PLANT PART: ARGON

AIR LIQUIDE

Air Liquide AGS GmbH
Fütingsweg 34
47805 Krefeld

DRAWING NAME:
PURE ARGON COLUMN
SUMP PAR-COLUMN/LAR TO DUMP
LIC 43023 / LIC 43033

SIZE: A3

FUNKTION DIAGRAM

DRWG. NO.: K70101_149.dwg

PROJ. NO.: K70101

REPLACES: REPLACED BY: BASED:

DATE: 17.06.2005
AUTHOR: Frohn
CHECK: Eichler
STD.:

Comment	Origin	Type	Signal-/TAG-No.	Path	Function	Path	Type	Signal/TAG-No.	Destination	Comment
				1		51				
				2		52				
				3		53				
				4		54				
				5		55				
				6		56				
				7		57				
				8		58				
				9		59				
				10		60				
				11		61				
				12		62				
				13		63				
				14		64				
				15		65				
				16		66				
				17		67				
				18		68				
				19		69				
				20		70				
				21		71				
				22		72				
				23		73				
				24		74				
				25		75				
				26		76				
				27		77				
				28		78				
				29		79				
				30		80				
				31		81				
				32		82				
				33		83				
				34		84				
				35		85				
				36		86				
				37		87				
				38		88				
				39		89				
				40		90				
				41		91				
				42		92				
				43		93				
				44		94				
				45		95				
				46		96				
				47		97				
				48		98				

JOB NO.	FILE NO	REV.	DATE	REVISIONS	BY	CHKD.
		Rev3	08.6.07	"as built"	Frohn	Stippich
		Rev2	02.2.06		Frohn	Eichler

PROJECT NAME: ASU KOSICE

PLANT PART: ARGON

AIR LIQUIDE

Air Liquide AGS GmbH
Fütingsweg 34
47805 Krefeld

DRAWING NAME: SPARE

SIZE: A3

FUNKTION DIAGRAM

DRWG. NO.: K70101_150.dwg

PROJ. NO.: K70101

REPLACES:

REPLACED BY:

DATE: 17.06.2005
AUTHOR: Frohn
CHECK: Eichler
STD.:

Page no. 150
Of 230 Pages

BASED:

Rang.	Comment	Origin	Type	Signal-/TAG-No.	Path
	Reset trip LOX-pump P61100	Software reset button	1	HS 61100_Res	10
	Trip cold box	from page no.101/79	1	US 20000_dyn	14
	GOX temp. trip	Contact ESD relay	1	UA 20027	17
	GOX temp. trip	from page no.105/94	1	US 20027_dyn	20
	Fail pump	from page no.154/78	1	HS 61100_fail	23
	Bearing temp.	Value < Min2	1	TLL 61140	25
	Bearing temp.	Value < Min2	1	TLL 61141	27
	Bearing temp.	Value > Max2	1	THH 61141	29
	ESD P61100/P61200	Contact ESD-Relay	0	HA61000_1	31
	LP columne sump	Valuse < Min2	1	LLL 22001	33
	Electrical fail frequency converter	Contact	0	EA 61100	35
	LOX-pump P61100 on	Check back signal	1	EH 61100	41
	LOX behind P61100	Value < Min2	1	PLL 61170	43

Function

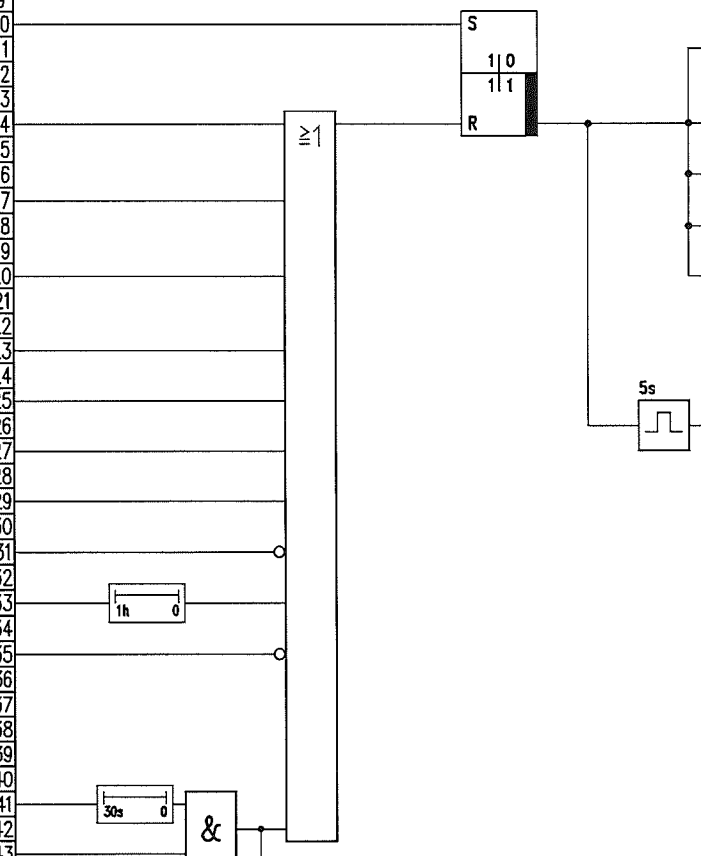

Path	Type	Signal/TAG-No.	Destination	Comment	Rang.
61	1	UA 61100	Alarm OS	"Trip LOX-pump P61100"	
64	1	US 61100	to page no. 155/40	Trip LOX-pump P61100	
66	1	US 61100	to page no. 152/7	Start conditions	
68	1	US 61100	to page no. 105/24	GOX-trip	
70	1	US 61100	to page no. 120/33	LOX-trip	
76	1	US 61100_dyn	to page no. 155/39	HS61110 off	
95	1	PALL 61170	Alarm OS	"Pump kavitated"	

JOB NO.	FILE NO.	REV.	DATE	REVISIONS	BY	CHKD.
		Rev3	08.6.07	"as built"	Frohn	Stippich
		Rev2	02.2.06		Frohn	Eichler

PROJECT NAME: ASU KOSICE

PLANT PART: LOX-PUMPS

AIR LIQUIDE

Air Liquide AGS GmbH
Fülingsweg 34
47805 Krefeld

DRAWING NAME: LOX PUMP P61100 TRIP US61100

SIZE: A3

FUNKTION DIAGRAM

DRWG. NO.: K70101_151.dwg

PROJ. NO.: K70101

REPLACES: REPLACED BY: BASED:

DATE: 17.06.2005
AUTHOR: Frohn
CHECK: Eichler
STD.:

Comment	Origin	Type	Signal-/TAG-No.	Path
				1
				2
				3
				4
Start cool down pump	Software switch	1	HS 61101S	5
Lock Lox-pump	from page no.154/94	1	HS61100_IL	6
Trip LOX-pump	from page no.151/66	1	US 61100	7
				8
LOX-pump on	Check back signal	1	EH 61100	9
				10
Bearing temp.	Value < Min1	1	TL 61140	11
				12
Bearing temp.	Value < Min1	1	TL 61141	13
				14
Bearing temp.	Value > Max1	1	TH 61141	15
				16
PV 61170 open	Y > 50%	1	P 61170_Y50	17
				18
HV 61110 closed	from page no.155/69	0	HS 61110	19
				20
Cool down pump	Value < Min	1	TL 61130	21
				22
				23
				24
				25
				26
				27
				28
				29
				30
				31
				32
				33
				34
				35
LOX-pump on	Check back signal	1	EH 61100	36
				37
				38
				39
				40
				41
				42
				43
				44
				45
				46
Start pump	Software push button	1	HS 61101_S1	47
				48

Function

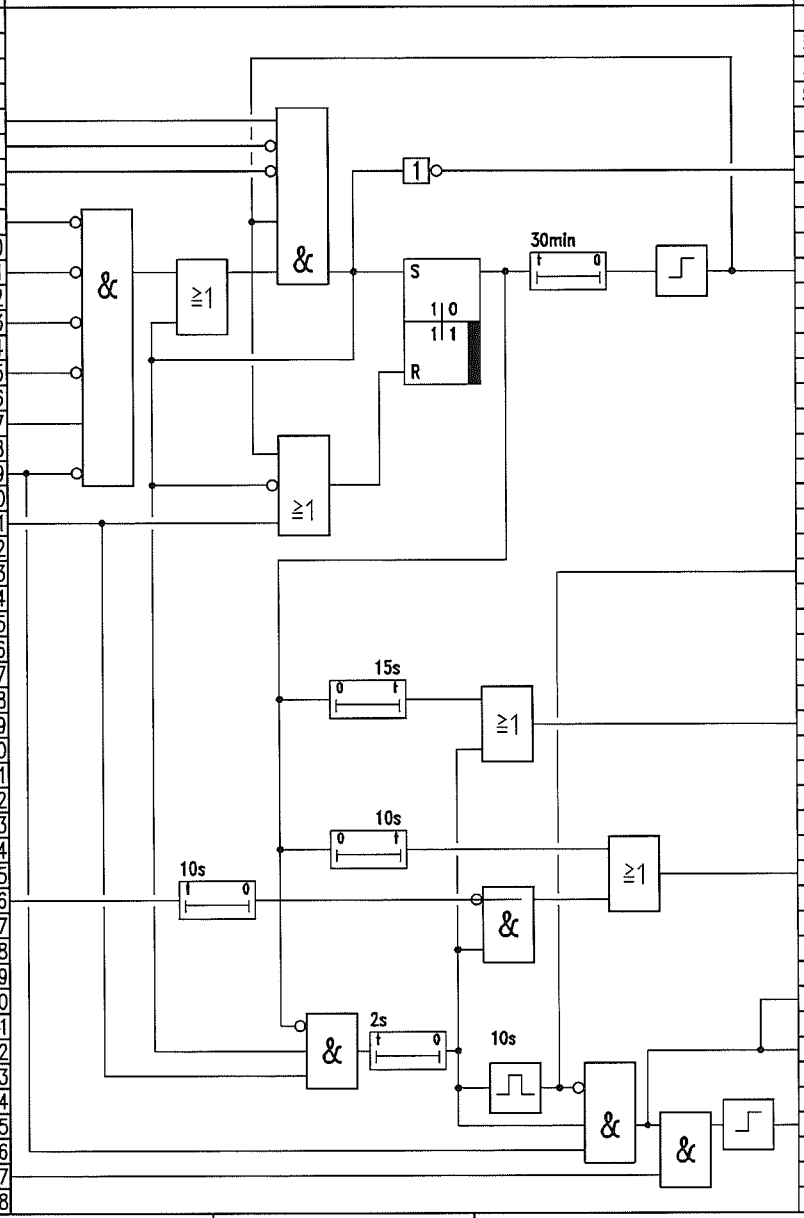

Path	Type	Signal/TAG-No.	Destination	Comment
51				
52				
53				
54				
55				
56				
57	1	UL 61100_A	to page no.154/26	LOX-pump off from seq.
58				
59				
60				
61	1	TAH 61130	Alarm OS	"Cool down seq. fault"
62				
63				
64				
65				
66				
67				
68				
69				
70				
71				
72				
73	1	US 61103_A	to page no. 153/14	Start valve HH61103
74				
75				
76				
77				
78				
79	1	UH 61110	to page no. 155/27	Open HV 61110
80				
81				
82				
83				
84				
85	1	P 61170_A	to page no. 156/14	
86				
87				
88				
89				
90	1	UOH 61101	Monitoring OS	"LOX-Pump ready to
91				start"
92	1	US 61101	to page no. 154/18	Ready to start
93				
94				
95	1	UH 61100_A	to page no. 154/20	LOX-pump on from
96				sequence
97				
98				

JOB NO.	FILE NO	REV.	DATE	REVISIONS	BY	CHKD.
		Rev3	08.6.07	"as built"	Frohn	Stippich
		Rev2	02.2.06		Frohn	Eichler

PROJECT NAME: ASU KOSICE

PLANT PART: LOX-PUMPS

AIR LIQUIDE

Air Liquide AGS GmbH
Fütingsweg 34
47805 Krefeld

DRAWING NAME:
LOX PUMP P61100
START SEQUENCE US61101

SIZE: A3

FUNKTION DIAGRAM

DRWG. NO.: K70101_152.dwg

PROJ. NO.: K70101

REPLACES: REPLACED BY: BASED:

DATE: 17.06.2005
AUTHOR: Frohn
CHECK: Eichler
STD.:

Comment	Origin	Type	Signal-/TAG-No.	Path
Start sequence	from page no.152/73	1	US 61103_A	14

Function

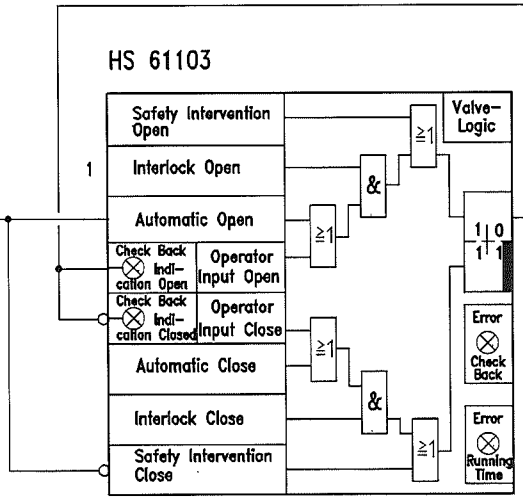

Path	Type	Signal/TAG-No.	Destination	Comment
64	1	HS 61103	Solenoid valve	Open start ball valve
65				HH 61103

		Rev3	08.6.07	"as built"	Frohn	Stippich
		Rev2	02.2.06		Frohn	Eichler
JOB NO.	FILE NO.	REV.	DATE	REVISIONS	BY	CHKD.

PROJECT NAME: ASU KOSICE

PLANT PART: LOX-PUMPEN

AIR LIQUIDE

Air Liquide AGS GmbH
Fütingsweg 34
47805 Krefeld

DRAWING NAME: LOX PUMP P61100
START BALL VALVE HS61103

SIZE: A3

FUNKTION DIAGRAM

DRWG. NO.: K70101_153.dwg

PROJ. NO.: K70101

REPLACES: REPLACED BY: BASED:

DATE: 17.06.2005
AUTHOR: Frohn
CHECK: Eichler
STD.:

Comment	Origin	Type	Signal-/TAG-No.	Path
Ready to start	from page no.152/92	1	US 61101	18
Pump on from seq.	from page no.152/95	1	UH 61100_A	20
LOX-pump on	Check back signal	1	EH 61100	22
Pump off from seq.	from page no.152/57	1	UL 61100_A	26
Trip LOX-Pump	from page no.151/64	1	US 61100	30
Reset trip LOX-pump	Software button	1	HS61100_RES	40
FreqC M61100 fault	Contact	0	EA 61100	44

Function

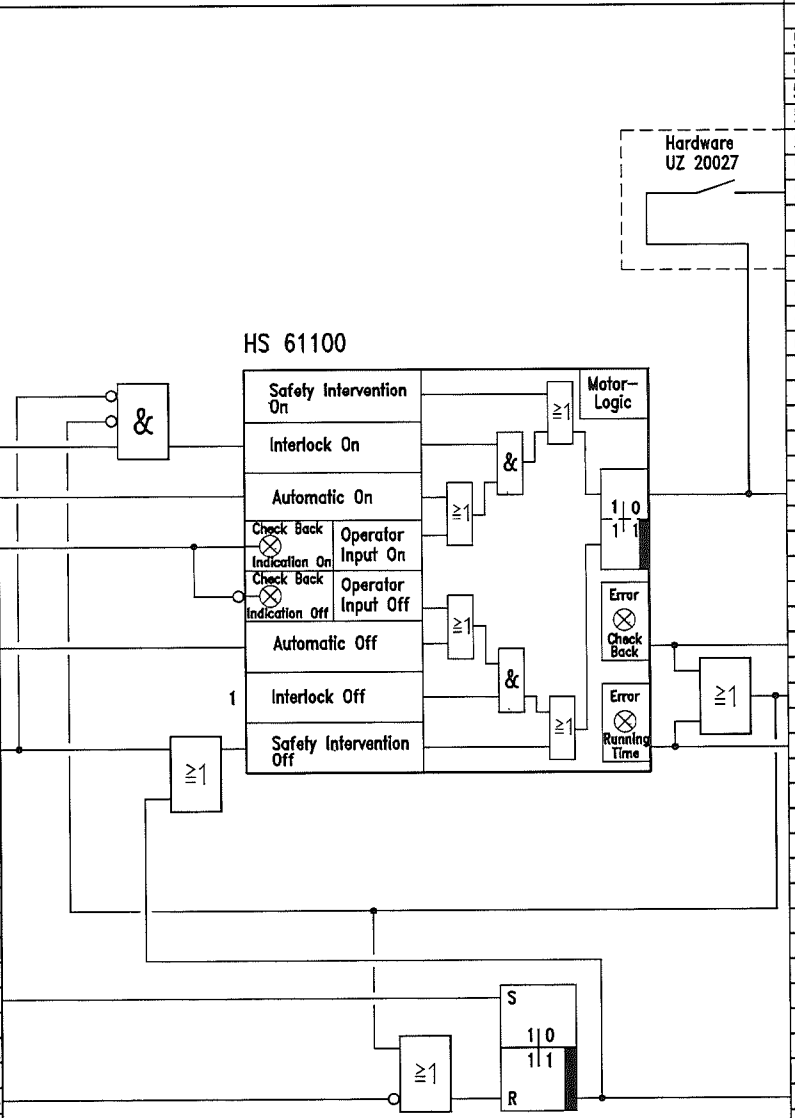

Path	Type	Signal/TAG-No.	Destination	Comment
58	1	HS 61100	Signal to MCC	Frequency converter
59				LOX-pump P61100 on
70	1	HS 61100		
76	1	HS 61100_CB	Alarm OS	"Check back error"
78	1	HS 61100_fail	to page no. 151/23	LOX-pump fail
80	1	HS 61100_RT	Alarm OS	"Running time error"
94	1	HS61100_IL	to page no. 152/6	Lock LOX-pump

JOB NO.	FILE NO	REV.	DATE	REVISIONS	BY	CHKD.
		Rev3	08.6.07	"as built"	Frohn	Stippich
		Rev2	02.2.06		Frohn	Eichler

PROJECT NAME: ASU KOSICE

PLANT PART: LOX-PUMPS

AIR LIQUIDE

Air Liquide AGS GmbH
Fütingsweg 34
47805 Krefeld

DRAWING NAME: LOX PUMP P61100 HS 61100

SIZE: A3

FUNKTION DIAGRAM

DRWG. NO.: K70101_154.dwg

PROJ. NO.: K70101

REPLACES: REPLACED BY: BASED:

DATE: 17.06.2005
AUTHOR: Frohn
CHECK: Eichler
STD.:

Comment	Origin	Type	Signal-/TAG-No.	Path
Open from sequence	from page no.152/79	1	UH 61110_A	27
Trip LOX-pump	from page no.151/76	1	US 61100_dyn	39
LOX-pump off	Check back signal	0	EH 61100	41
Trip coldbox	from page no.101/80	1	US 20000_dyn	43

Function

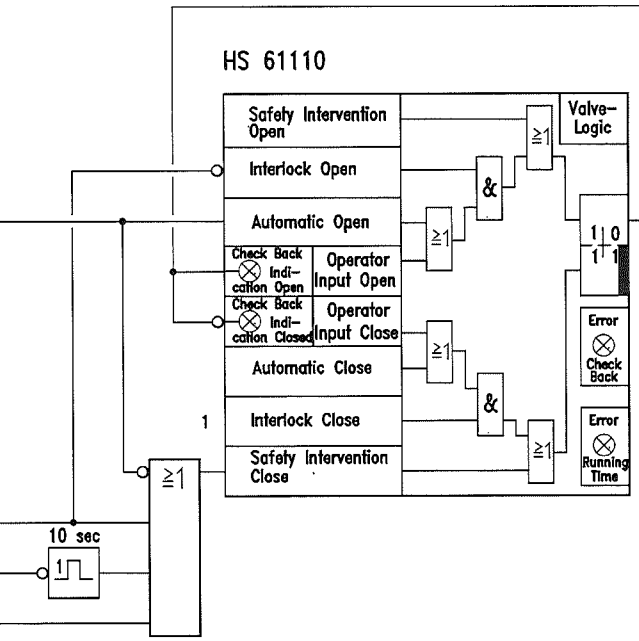

Path	Type	Signal/TAG-No.	Destination	Comment
69	0	US 61110	to page no. 151/19	Start conditions
77	1	US 61110	Solenoid valve	Open valve HV61110
78				LOX from K22001

JOB NO.	FILE NO.	REV.	DATE	REVISIONS	BY	CHKD.
		Rev3	08.6.07	"as built"	Frohn	Slippich
		Rev2	02.2.06		Frohn	Eichler

PROJECT NAME: ASU KOSICE

PLANT PART: LOX-PUMPS

AIR LIQUIDE

Air Liquide AGS GmbH
Fütingsweg 34
47805 Krefeld

DRAWING NAME: LOX PUMP P61100
LOX FROM LP-COLUMN
HS 61110

SIZE: A3

FUNKTION DIAGRAM

DRWG. NO.: K70101_155.dwg

PROJ. NO.: K70101

REPLACES: REPLACED BY: BASED:

DATE: 17.06.2005
AUTHOR: Frohn
CHECK: Eichler
STD.:

Comment	Origin	Type	Signal-/TAG-No.	Path
End pressure LOX-pump P61100	P-transmitter from page no.109/86	E 1	PT 61170 PIC20011_Y	9, 10
LOX-pump i. operation	from page no.152/85	1	P61170_A	14

Function

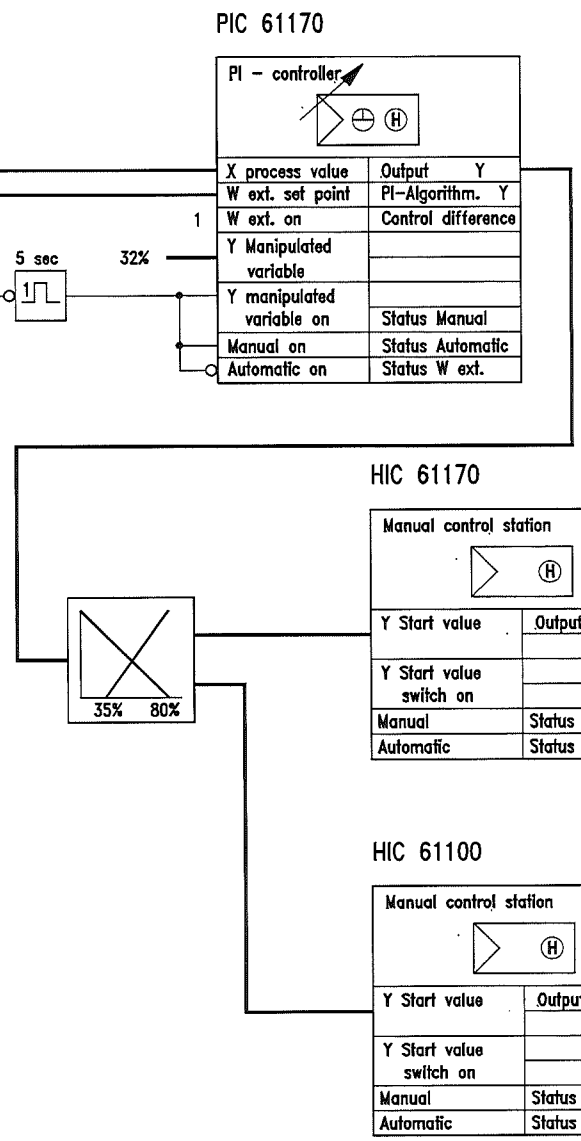

Path	Type	Signal/TAG-No.	Destination	Comment
77	E	PV 61170	Positioner 0-100% = 20-4mA	Control valve Recyeled LOX product PV 61170
91	E	HC 61100	Frequency converter 0-100% = 4-20mA	Speed control

JOB NO.	FILE NO.	REV.	DATE	REVISIONS	BY	CHKD.
		Rev3	08.6.07	"as built"	Frohn	Stippich
		Rev2	02.2.06		Frohn	Eichler

PROJECT NAME: ASU KOSICE

PLANT PART: LOX-PUMPS

AIR LIQUIDE

Air Liquide AGS GmbH
Fütingsweg 34
47805 Krefeld

DRAWING NAME: LOX PUMP P61100
SPEED/PRESSURE CONTROL
PIC 61170 / HIC 61100

SIZE: A3 — FUNKTION DIAGRAM

DRWG. NO.: K70101_156.dwg

PROJ. NO.: K70101

REPLACES: REPLACED BY: BASED:

DATE: 17.06.2005
AUTHOR: Frohn
CHECK: Eichler
STD.:

Comment	Origin	Type	Signal-/TAG-No.	Path
Bearing temp. P61100	Pt100	E	T61141_I	2
Limit value	Constant	E	20.0°C	5
Limit value	Constant	E	0.0°C	10
Heating on	Check back signal	1	EH 61110	22
Reset trip heating	Software button	1	US61110_RES	40

Function

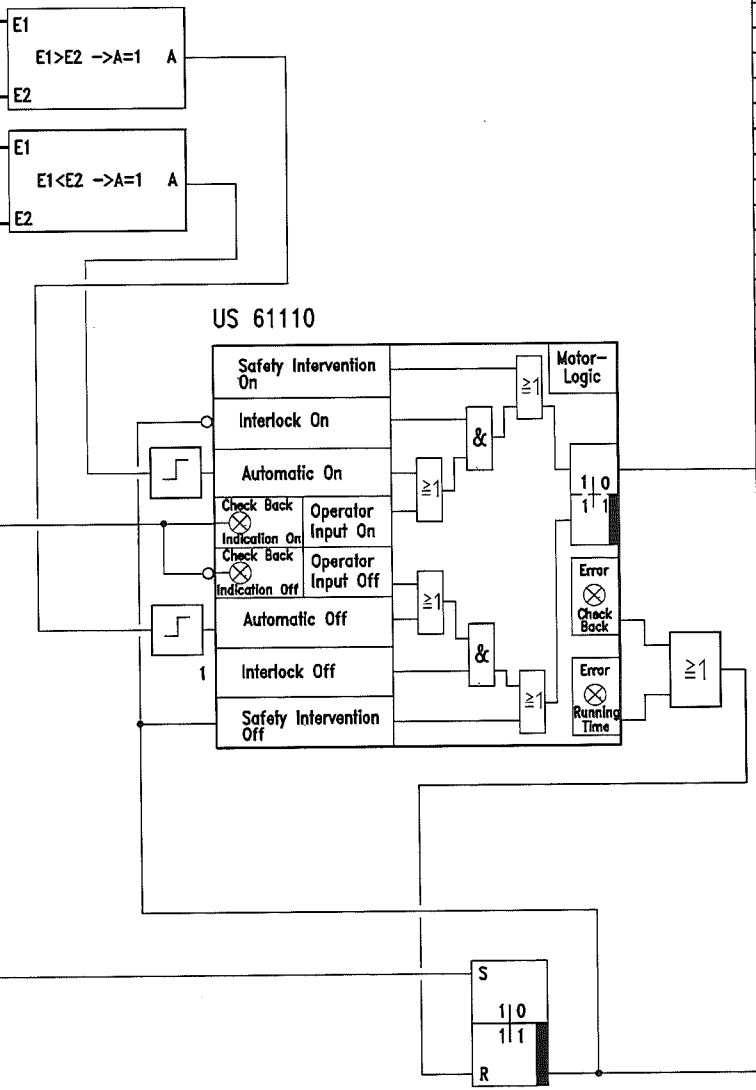

Path	Type	Signal/TAG-No.	Destination	Comment
70	1	US 61110	Signal to MCC	Heating M61110 on
94	1	US 61110_FRTFEP	Alarm OS	Heating fail

JOB NO.	FILE NO	REV.	DATE	REVISIONS	BY	CHKD.
		Rev3	08.6.07	"as built"	Frohn	Stippich
		Rev2	02.2.06		Frohn	Eichler

PROJECT NAME: ASU KOSICE

PLANT PART: LOX-PUMPS

AIR LIQUIDE

Air Liquide AGS GmbH
Fütingsweg 34
47805 Krefeld

DRAWING NAME:
LOX PUMP P61100
BEARING HEATING M61100
US 61110

SIZE: A3

FUNKTION DIAGRAM

DRWG. NO.: K70101_157.dwg

PROJ. NO.: K70101

REPLACES: REPLACED BY: BASED:

DATE: 17.06.2005
AUTHOR: Frohn
CHECK: Eichler
STD.:

Rang.	Comment	Origin	Type	Signal-/TAG-No.	Path
					1
					2
					3
					4
					5
					6
					7
					8
					9
	Reset trip LOX-pump	Software reset button	1	HS 61200_Res	10
	P61200				11
					12
					13
	Trip cold box	from page no.101/83	1	US 20000_dyn	14
					15
					16
	GOX temp. trip	Contact ESD relay	1	UA 20027	17
					18
					19
	GOX temp. trip	from page no.105/97		US 20027_dyn	20
					21
					22
	Fail pump	from page no.161/78	1	HS 61200_fail	23
					24
	Bearing temp.	Value < Min2	1	TLL 61240	25
					26
	Bearing temp.	Value < Min2	1	TLL 61241	27
					28
	Bearing temp.	Value > Max2	1	THH 61241	29
					30
	ESD P61100/P61200	Contact	0	HA 61000_1	31
					32
	LP columne sump	Value < Min2	1	LLL22000	33
					34
	Electrical fail	Contact	0	EA 61200	35
	frequency converter				36
					37
					38
					39
					40
	LOX-pump P61200 on	Check back signal	1	EH 61200	41
					42
	LOX behind P61200	Value < Min2	1	PLL 61270	43
					44
					45
					46
					47
					48

Function

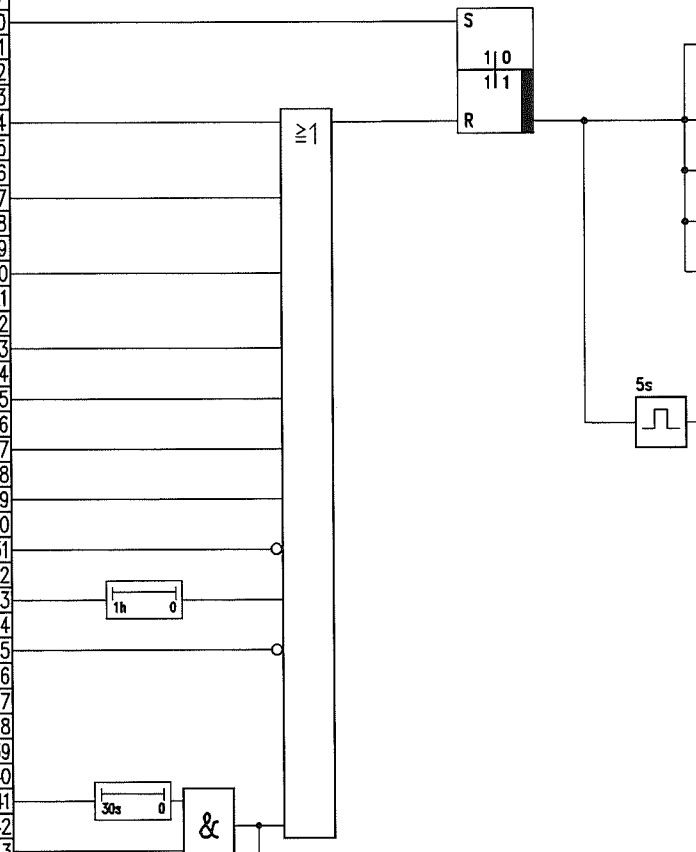

Path	Type	Signal/TAG-No.	Destination	Comment	Rang.
51					
52					
53					
54					
55					
56					
57					
58					
59					
60					
61	1	UA 61200	Alarm OS	"Trip LOX-pump P61200"	
62					
63					
64	1	US 61200	to page no. 161/40	Trip LOX-pump P61200	
65					
66	1	US 61200	to page no. 159/7	Start conditions	
67					
68	1	US 61200	to page no. 105/26	GOX-trip	
69					
70	1	US 61200	to page no. 120/35	LOX-trip	
71					
72					
73					
74					
75					
76	1	US 61200_dyn	to page no. 162/39	HS61210 off	
77					
78					
79					
80					
81					
82					
83					
84					
85					
86					
87					
88					
89					
90					
91					
92					
93					
94					
95	1	PALL 61270	Alarm OS	"Pump kavitated"	
96					
97					
98					

JOB NO.	FILE NO.	REV.	DATE	REVISIONS	BY	CHKD.
		Rev3	08.6.07	"as built"	Frohn	Stippich
		Rev2	02.2.06		Frohn	Eichler

PROJECT NAME: ASU KOSICE

PLANT PART: LOX-PUMPS

AIR LIQUIDE

Air Liquide AGS GmbH
Fütingsweg 34
47805 Krefeld

DRAWING NAME: LOX PUMP P61200 TRIP US61200

SIZE: A3

FUNKTION DIAGRAM

DRWG. NO.: K70101_158.dwg

PROJ. NO.: K70101

REPLACES: REPLACED BY:

DATE: 17.06.2005
AUTHOR: Frohn
CHECK: Eichler
STD.:

BASED:

Comment	Origin	Type	Signal-/TAG-No.	Path
Start cool down pump	Software switch	1	HS 61201S	5
Lock LOX-pump	from page no.161/78	1	HS 61200_IL	6
Trip LOX-pump	from page no.158/66	1	US 61200	7
LOX-pump on	Check back signal	1	EH 61200	9
Bearing temp.	Value < Min1	1	TL 61240	11
Bearing temp.	Value < Min1	1	TL 61241	13
Bearing temp.	Value > Max1	1	TH 61241	15
PCV 61170 open	Y > 50%	1	P 61270_Y50	17
HV 61210 closed	from page no.162/69	0	HS 61210	19
Cool down pump	Value < Min	1	TL 61230	21
LOX-pump on	Check back signal	1	EH 61200	36
Start pump	Software push button	1	HS 61201_S1	47

Function

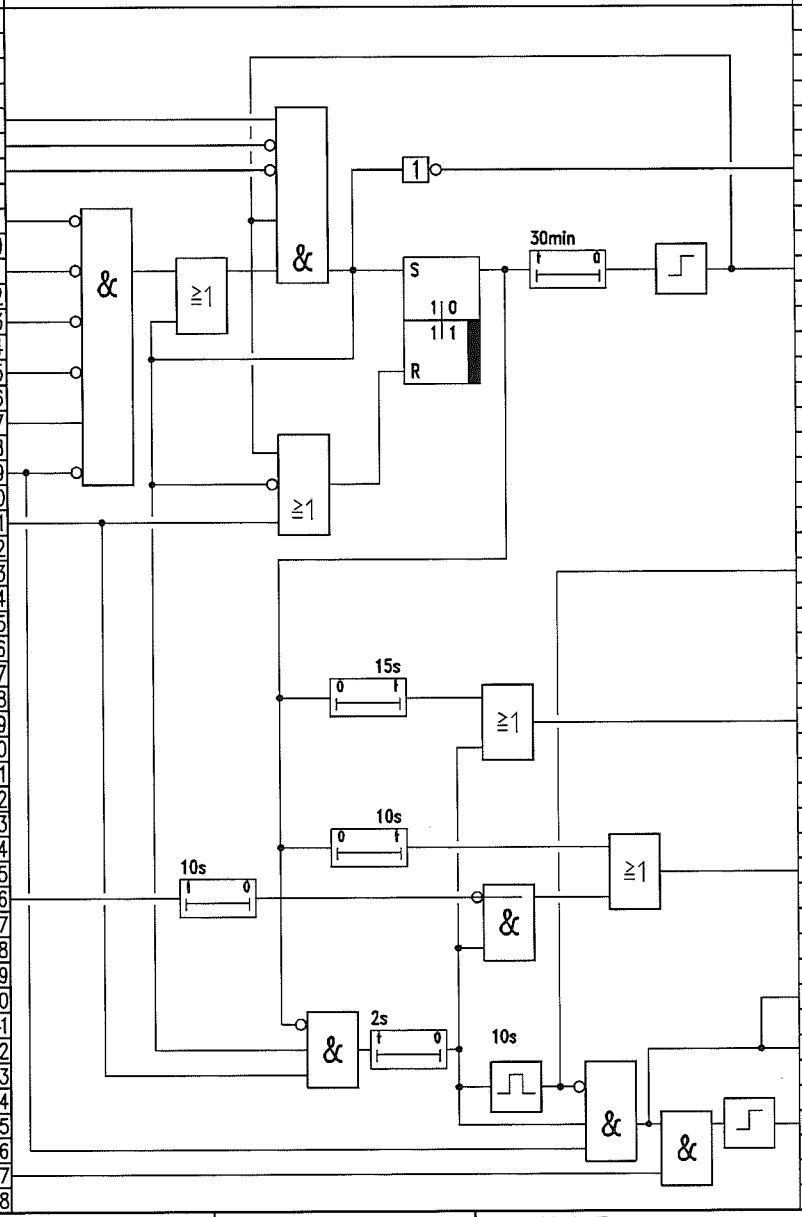

Path	Type	Signal/TAG-No.	Destination	Comment
57	1	UL 61200_A	to page no.161/36	LOX-pump off from seq.
61	1	TAH 61230	Alarm OS	"Cool down seq. fault"
73	1	US 61203_A	to page no. 160/14	Start valve HH61203
79	1	UH 61210	to page no. 162/27	Open HV 61210
85	1	P 61270_A	to page no. 163/14	
90	1	UOH 61201	Monitoring OS	"LOX-Pump ready to start"
92	1	US 61201	to page no. 161/28	Ready to start
95	1	UH 61200_A	to page no. 161/30	LOX-pump on from sequence

JOB NO.	FILE NO	REV.	DATE	REVISIONS	BY	CHKD.
		Rev3	08.6.07	"as built"	Frohn	Stippich
		Rev2	02.2.06		Frohn	Eichler

PROJECT NAME: ASU KOSICE

PLANT PART: LOX-PUMPS

AIR LIQUIDE

Air Liquide AGS GmbH
Fütingsweg 34
47805 Krefeld

DRAWING NAME: LOX PUMP P61200 START SEQUENCE US61201

SIZE: A3

FUNKTION DIAGRAM

DRWG. NO.: K70101_159.dwg

PROJ. NO.: K70101

REPLACES:

REPLACED BY:

DATE: 17.06.2005
AUTHOR: Frohn
CHECK: Eichler
STD.:

BASED:

Comment	Origin	Type	Signal-/TAG-No.	Path
Start sequence	from page no.159/73	1	HS 61103	14

Function

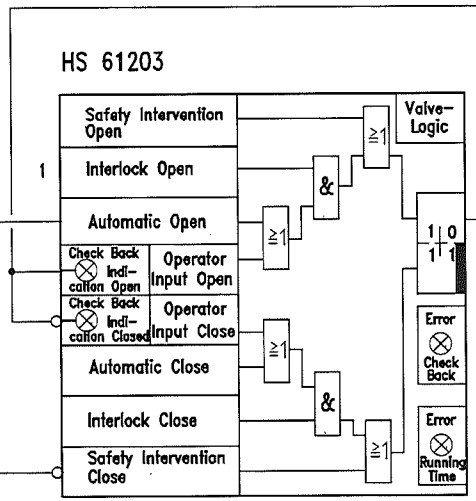

Path	Type	Signal/TAG-No.	Destination	Comment
64	1	HS 61203	Solenoid valve	Open start ball valve
65				HH 61203

		Rev3	08.6.07	"as built"	Frohn	Stippich
		Rev2	02.2.06		Frohn	Eichler
JOB NO.	FILE NO.	REV.	DATE	REVISIONS	BY	CHKD.

PROJECT NAME: ASU KOSICE

PLANT PART: LOX-PUMPS

AIR LIQUIDE

Air Liquide AGS GmbH
Fütingsweg 34
47805 Krefeld

DRAWING NAME: LOX PUMP P61200
START BALL VALVE HS61203

SIZE: A3

FUNKTION DIAGRAM

DRWG. NO.: K70101_160.dwg

PROJ. NO.: K70101

REPLACES: REPLACED BY: BASED:

DATE: 17.06.2005
AUTHOR: Frohn
CHECK: Eichler
STD.:

Comment	Origin	Type	Signal-/TAG-No.	Path
Ready to start	from page no.159/92	1	US 61201	18
Pump on from seq.	from page no.159/95	1	UH 61200_A	20
LOX-pump on	Check back signal	1	EH 61200	22
Pump off from seq.	from page no.159/57	1	UL 61200_A	26
Trip LOX-Pump	from page no.158/64	1	US 61200	30
Reset trip LOX-pump	Software button	1	HS61200_RES	40
FreqC M61200 fault	Contact	0	EA 61200	44

Function

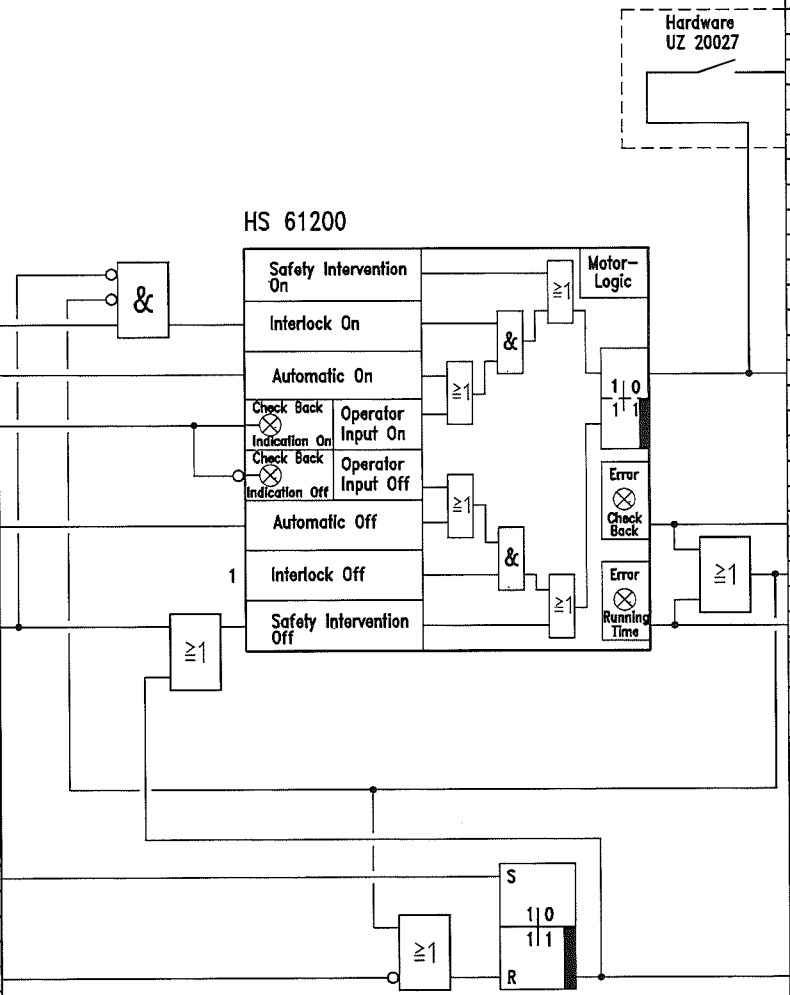

Path	Type	Signal/TAG-No.	Destination	Comment
58	1	HS 61200	Signal to MCC	Frequency converter
59				LOX-pump P61200 on
70	1	HS 61200		
76	1	HS 61200_CB	Alarm OS	"Check back error"
78	1	HS 61200_fail	to page no. 158/23	LOX-pump fail
80	1	HS 62100_RT	Alarm OS	"Running time error"
94	1	HS61200_IL	to page no. 159/6	Lock LOX-pump

JOB NO.	FILE NO	REV.	DATE	REVISIONS	BY	CHKD.
		Rev3	08.6.07	"as built"	Frohn	Stippich
		Rev2	02.2.06		Frohn	Eichler

PROJECT NAME: ASU KOSICE

PLANT PART: LOX-PUMPS

AIR LIQUIDE

Air Liquide AGS GmbH
Fütingsweg 34
47805 Krefeld

DRAWING NAME: LOX PUMP P61200 HS 61200

SIZE: A3

FUNKTION DIAGRAM

DRWG. NO.: K70101_161.dwg

PROJ. NO.: K70101

REPLACES: REPLACED BY: BASED:

DATE: 17.06.2005
AUTHOR: Frohn
CHECK: Eichler
STD.:

Comment	Origin	Type	Signal-/TAG-No.	Path
Open from sequence	from page no.159/79	1	UH 61210_A	27
Trip LOX-pump	from page no.158/76	1	US 61200_dyn	39
LOX-pump off	Check back signal	0	EH 61200	41
Trip coldbox	from page no.101/84	1	US 20000_dyn	43

Function

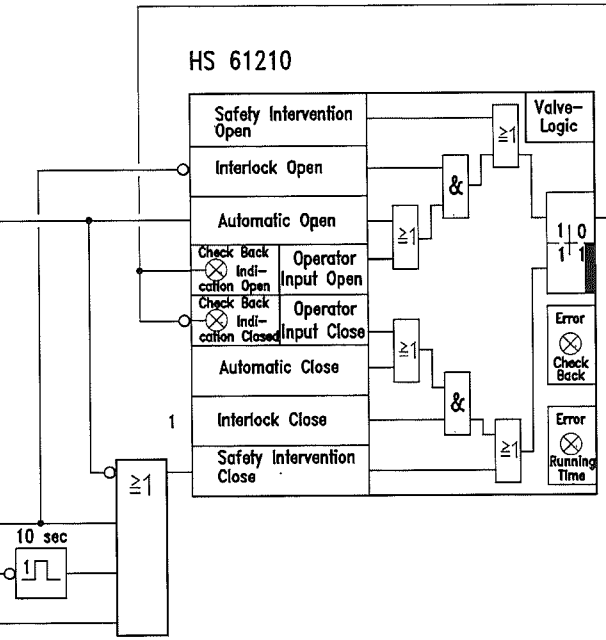

Path	Type	Signal/TAG-No.	Destination	Comment
69	0	US 61210	to page no. 159/19	Start conditions
77	1	US 61210	Solenoid valve	Open valve HV61210
78				LOX from K22001

JOB NO.	FILE NO.	REV.	DATE	REVISIONS	BY	CHKD.
		Rev3	08.6.07	"as built"	Frohn	Stippich
		Rev2	02.2.06		Frohn	Eichler

PROJECT NAME: ASU KOSICE

PLANT PART: LOX-PUMPS

AIR LIQUIDE

Air Liquide AGS GmbH
Fütingsweg 34
47805 Krefeld

DRAWING NAME: LOX PUMP P61200
LOX FROM LP-COLUMN
HS 61210

SIZE: A3

FUNKTION DIAGRAM

DRWG. NO.: K70101_162.dwg

PROJ. NO.: K70101

REPLACES: REPLACED BY: BASED:

DATE: 17.06.2005
AUTHOR: Frohn
CHECK: Eichler
STD.:

Comment	Origin	Type	Signal-/TAG-No.	Path
End pressure LOX-pump P61200	P-transmitter	E	PT 61270	9
	from page no.109/90	E	PIC20011_Y	10
LOX-pump i. operation	from page no.159/85	1	P61270_A	14

Function

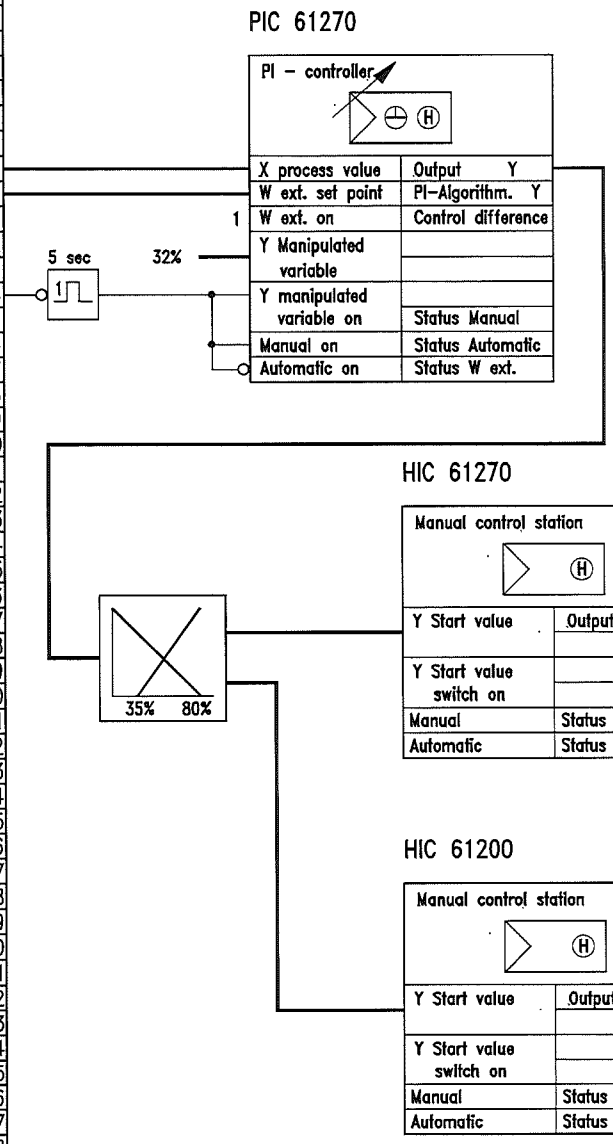

Path	Type	Signal/TAG-No.	Destination	Comment
77	E	PV 61270	Positioner 0-100%	Control valve
78			= 20-4mA	Recyeled LOX
79				product PV 61270
91	E	HC 61200	Frequency converter	Speed control
92			0-100% = 4-20mA	

JOB NO.	FILE NO	REV.	DATE	REVISIONS	BY	CHKD.
		Rev3	08.6.07	"as built"	Frohn	Stippich
		Rev2	02.2.06		Frohn	Eichler

PROJECT NAME: ASU KOSICE

PLANT PART: LOX-PUMPS

AIR LIQUIDE

Air Liquide AGS GmbH
Fütingsweg 34
47805 Krefeld

DRAWING NAME: LOX PUMP P61200
SPEED/PRESSURE CONTROL
PIC 61270 / HIC 61200

SIZE: A3

FUNKTION DIAGRAM

DRWG. NO.: K70101_163.dwg

PROJ. NO.: K70101

REPLACES: REPLACED BY: BASED:

DATE: 17.06.2005
AUTHOR: Frohn
CHECK: Eichler
STD.:

Comment	Origin	Type	Signal-/TAG-No.	Path
Bearing temp. P61200	Pt100	E	T61241_I	2
Limit value	Constant	E	20.0°C	5
Limit value	Constant	E	0.0°C	10
Heating on	Check back signal	1	EH 61210	22
Reset trip heating	Software button	1	US61210_RES	40

Function

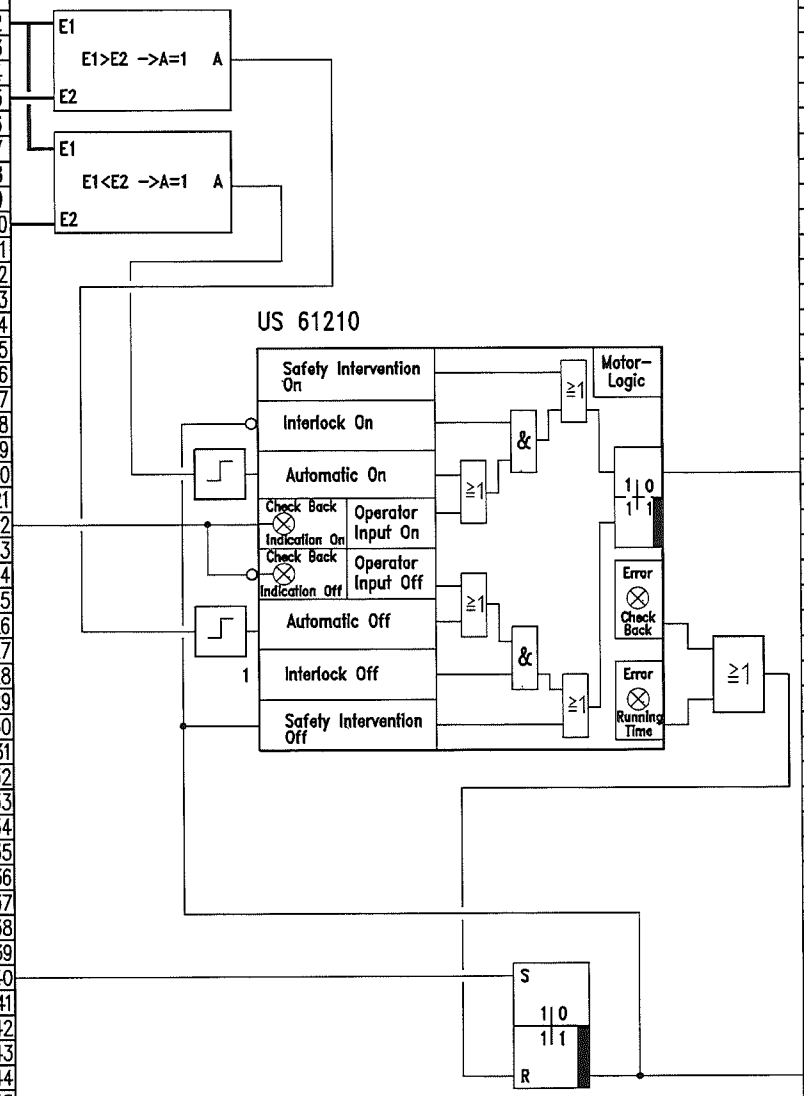

Path	Type	Signal/TAG-No.	Destination	Comment
70	1	US 61210	Signal to MCC	Heating M61210 on
94	1	US 61210_FRTFEP	Alarm OS	Heating fail

JOB NO.	FILE NO.	REV.	DATE	REVISIONS	BY	CHKD.
		Rev3	08.6.07	"as built"	Frohn	Stippich
		Rev2	02.2.06		Frohn	Eichler

PROJECT NAME: ASU KOSICE

PLANT PART: LOX-PUMPS

AIR LIQUIDE

Air Liquide AGS GmbH
Fütingsweg 34
47805 Krefeld

DRAWING NAME: LOX PUMP P61200
BEARING HEATING M61200
US 61210

SIZE: A3

FUNKTION DIAGRAM

DRWG. NO.: K70101_164.dwg

PROJ. NO.: K70101

REPLACES: REPLACED BY: BASED:

DATE: 17.06.2005
AUTHOR: Frohn
CHECK: Eichler
STD.:

Rang.	Comment	Origin	Type	Signal-/TAG-No.	Path
					1
					2
					3
					4
					5
					6
					7
					8
					9
	Reset trip LIN-pump	Software reset button	1	HS 71100_Res	10
	P71100				11
					12
					13
	Trip cold box	from page no.101/87	1	US 20000_dyn	14
					15
					16
	GAN temp. trip	Contact ESD relay	1	UA 20025	17
					18
					19
	GAN temp. trip	from page no.104/94	1	US 20025_dyn	20
					21
					22
	Fail pump	from page no.168/78	1	HS 71100_fail	23
					24
	Bearing temp.	Value < Min2	1	TLL 71140	25
					26
	Bearing temp.	Value < Min2	1	TLL 71141	27
					28
	Bearing temp.	Value > Max2	1	THH 71141	29
					30
	ESD P71100/P71200	Contact ESD-relay	0	HA 71000_1	31
					32
					33
					34
	Electrical fail	Contact	0	EL 71100	35
	frequency converter				36
					37
					38
					39
					40
	LOX-pump P71100 on	Check back signal	1	EH 71100	41
					42
	LIN behind P71100	Value < Min2	1	PLL 71170	43
					44
					45
					46
					47
					48

Function

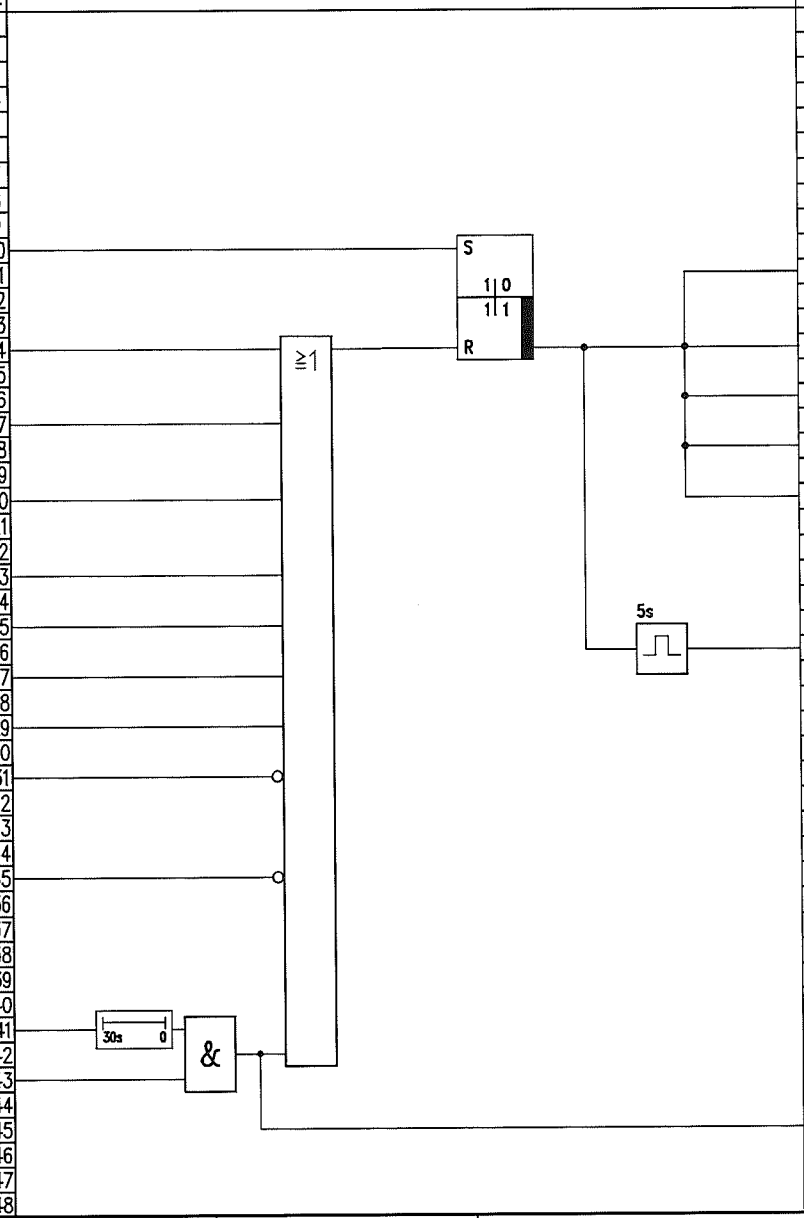

Path	Type	Signal/TAG-No.	Destination	Comment	Rang.
51					
52					
53					
54					
55					
56					
57					
58					
59					
60					
61	1	UA 71100	Alarm OS	"Trip LIN-pump P71100"	
62					
63					
64	1	US 71100	to page no. 168/40	Trip LIN-pump P71100	
65					
66	1	US 71100	to page no. 169/7	Start conditions	
67					
68	1	US 71100	to page no. 104/24	GAN-trip	
69					
70	1	US 71100	to page no. 121/33	LIN-trip	
71					
72					
73					
74					
75					
76	1	US 71100_dyn	to page no. 169/39	HS71110 off	
77					
78					
79					
80					
81					
82					
83					
84					
85					
86					
87					
88					
89					
90					
91					
92					
93					
94					
95	1	PALL 71170	Alarm OS	"Pump kavitated"	
96					
97					
98					

JOB NO.	FILE NO	REV.	DATE	REVISIONS	BY	CHKD.
		Rev3	08.6.07	"as built"	Frohn	Stippich
		Rev2	02.2.06		Frohn	Eichler

PROJECT NAME: ASU KOSICE

PLANT PART: LIN-PUMPS

AIR LIQUIDE

Air Liquide AGS GmbH
Fütingsweg 34
47805 Krefeld

DRAWING NAME: LIN PUMP P71100 TRIP US71100

SIZE: A3

FUNKTION DIAGRAM

DRWG. NO.: K70101_165.dwg

PROJ. NO.: K70101

REPLACES: REPLACED BY: BASED:

DATE: 17.06.2005
AUTHOR: Frohn
CHECK: Eichler
STD.:

Comment	Origin	Type	Signal-/TAG-No.	Path
Start cool down pump	Software switch	1	HS 71101S	5
Lock LIN-pump	from page no.	1	HS 71100_IL	6
Trip LOX-pump	from page no.165/66	1	US 71100	7
Pump off	Check back signal	0	EH 71100	9
Bearing temp.	Value < Min1	1	TL 71140	11
Bearing temp.	Value < Min1	1	TL 71141	13
Bearing temp.	Value > Max1	1	TH 71141	15
PV 71170 open	Y > 50%	1	P 71170_Y50	17
HV 71110 closed	from page no.169/69	0	HS 71110	19
Cool down pump	Value < Min	1	TL 71130	21
LIN-pump on	Check back signal	1	EH 71100	36
Start pump	Software push button	1	HS 71101_S	46

Function

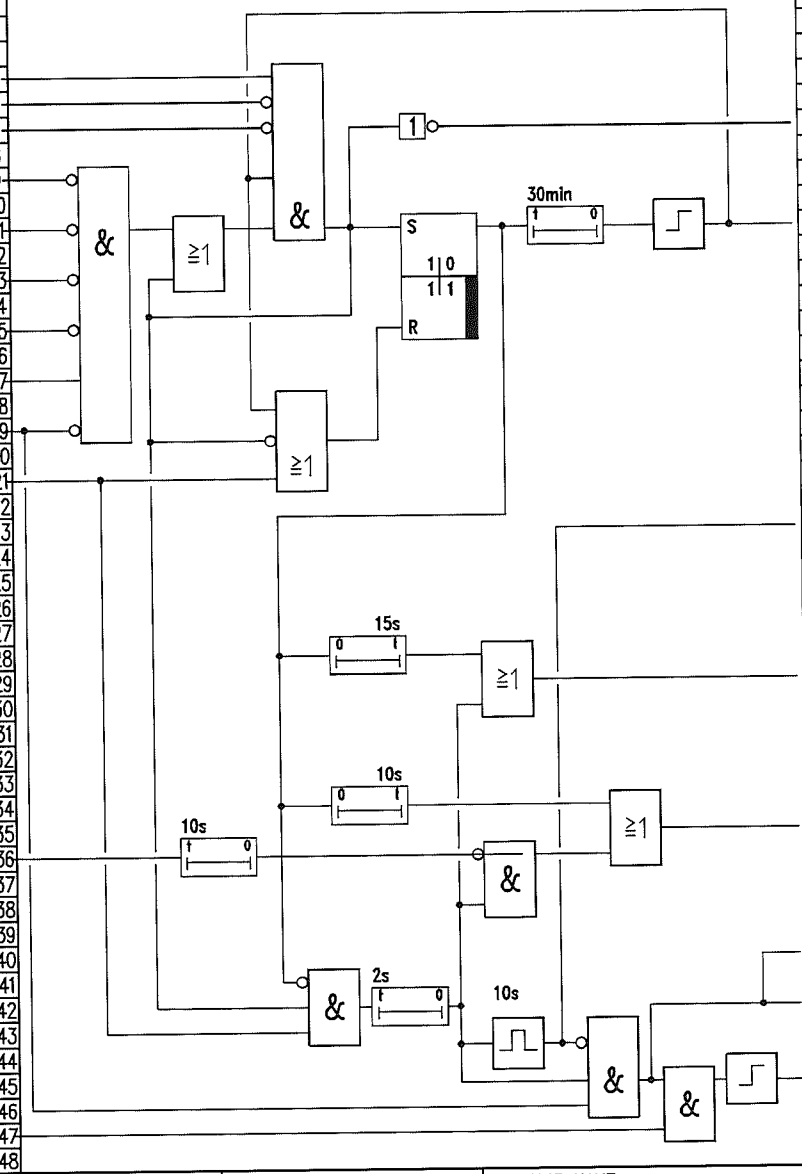

Path	Type	Signal/TAG-No.	Destination	Comment
57	1	UL 71100_A	to page no.168/36	LIN-pump off from seq.
61	1	TAH 71130	Alarm OS	"Cool down seq. fault"
73	1	US 71103_A	to page no. 167/14	Start valve HH71103
79	1	UH 71110_A	to page no. 169/27	Open HV 71110
85	1	P 71170_A	to page no. 170/14	
90	1	UOH 71101	Monitoring OS	"LIN-Pump ready to start"
92	1	US 71101	to page no. 168/28	Ready to start
95	1	UH 71100_A	to page no. 168/30	LIN-pump on from sequence

JOB NO.	FILE NO	REV.	DATE	REVISIONS	BY	CHKD.
		Rev3	08.6.07	"as built"	Frohn	Stippich
		Rev2	02.2.06		Frohn	Eichler

PROJECT NAME: ASU KOSICE

PLANT PART: LIN-PUMPS

AIR LIQUIDE

Air Liquide AGS GmbH
Fütingsweg 34
47805 Krefeld

DRAWING NAME: LIN PUMP P71100 START SEQUENCE US71101

SIZE: A3

FUNKTION DIAGRAM

DRWG. NO.: K70101_166.dwg

PROJ. NO.: K70101

REPLACES: REPLACED BY: BASED:

DATE: 17.06.2005
AUTHOR: Frohn
CHECK: Eichler
STD.:

Comment	Origin	Type	Signal-/TAG-No.	Path
Start sequence	from page no.166/73	1	US 71103_A	14

Function

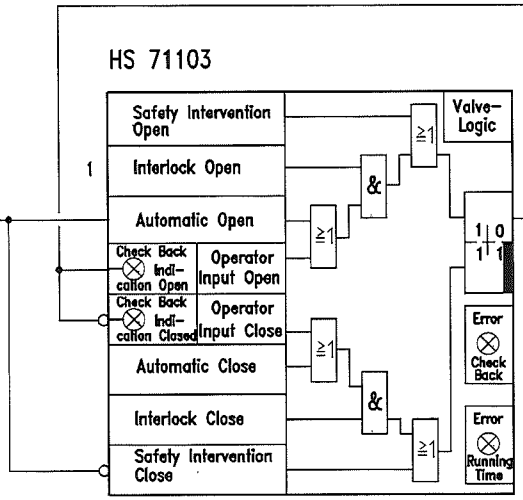

Path	Type	Signal/TAG-No.	Destination	Comment
64	1	HS 71103	Solenoid valve	Open start ball valve
65				HH 71103

JOB NO.	FILE NO	REV.	DATE	REVISIONS	BY	CHKD.
		Rev3	08.6.07	"as built"	Frohn	Stippich
		Rev2	02.2.06		Frohn	Eichler

PROJECT NAME: ASU KOSICE

PLANT PART: LIN-PUMPS

AIR LIQUIDE

Air Liquide AGS GmbH
Fütingsweg 34
47805 Krefeld

DRAWING NAME:
LIN PUMP P71100
START BALL VALVE HS71103

SIZE: A3

FUNKTION DIAGRAM

DRWG. NO.: K70101_167.dwg

PROJ. NO.: K70101

REPLACES: REPLACED BY: BASED:

DATE: 17.06.2005
AUTHOR: Frohn
CHECK: Eichler
STD.:

Comment	Origin	Type	Signal-/TAG-No.	Path
Ready to start	from page no.166/92	1	US 71101	18
Pump on from seq.	from page no.166/95	1	UH 71100_A	20
LIN-pump on	Check back signal	1	EH 71100	22
Pump off from seq.	from page no.166/57	1	UL 71100_A	26
Trip LIN-Pump	from page no.165/64	1	US 71100	30
Reset trip LIN-pump	Software button	1	HS71100_RES	40
FreqC M71100 fault	Contact	0	EA 71100	44

Function

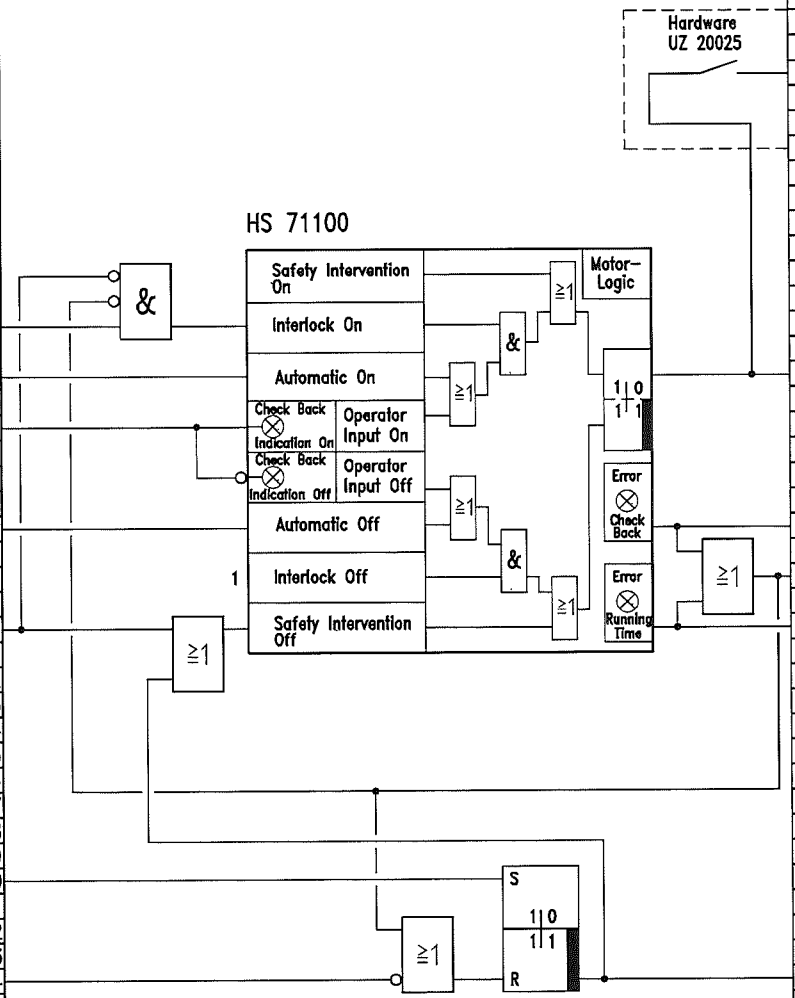

Path	Type	Signal/TAG-No.	Destination	Comment
58	1	HS 71100	Signal to MCC	Frequency converter
59				LIN-pump P71100 on
70	1	HS 71100		
76	1	HS 71100_CB	Alarm OS	"Check back error"
78	1	HS 71100_fail	to page no. 165/23	LIN-pump fail
80	1	HS 71100_RT	Alarm OS	"Running time error"
94	1	HS71100_IL	to page no. 166/6	Lock LIN-pump

JOB NO.	FILE NO	REV.	DATE	REVISIONS	BY	CHKD.
		Rev3	08.6.07	"as built"	Frohn	Stippich
		Rev2	02.2.06		Frohn	Eichler

PROJECT NAME: ASU KOSICE

PLANT PART: LIN-PUMPS

AIR LIQUIDE

Air Liquide AGS GmbH
Fütingsweg 34
47805 Krefeld

DRAWING NAME: LIN PUMP P71100 HS 71100

SIZE: A3

FUNKTION DIAGRAM

DRWG. NO.: K70101_168.dwg

PROJ. NO.: K70101

REPLACES: REPLACED BY:

DATE: 17.06.2005
AUTHOR: Frohn
CHECK: Eichler
STD.:

Page no. 168
Of 230 Pages

BASED:

Comment	Origin	Type	Signal-/TAG-No.	Path
Open from sequence	from page no.166/79	1	UH 71110	27
Trip LIN-pump	from page no.165/76	1	US 71100_dyn	39
LIN-pump off	Check back signal	0	EH 71100	41
Trip colbbox	from page no.101/	1	US 20000_dyn	43

Function

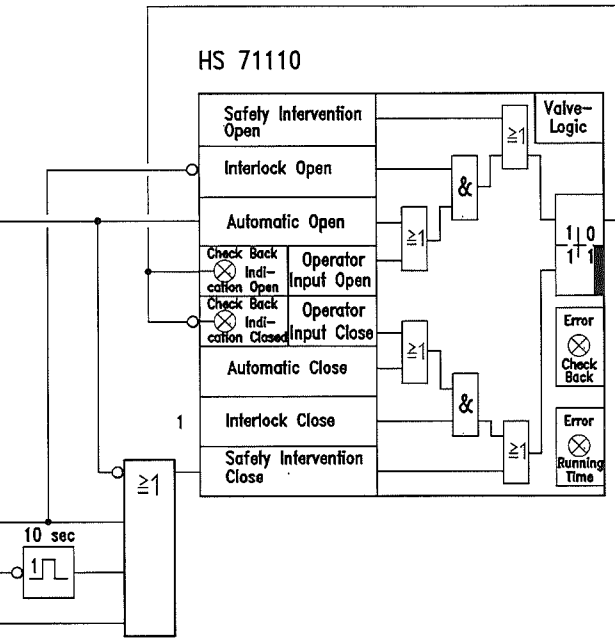

Path	Type	Signal/TAG-No.	Destination	Comment
69	0	US 71110	to page no. 166/19	Start conditions
77	1	US 71110	Solenoid valve	Open valve HV71110
78				LIN from B21002

JOB NO.	FILE NO.	REV.	DATE	REVISIONS	BY	CHKD.
		Rev3	08.6.07	"as built"	Frohn	Stippich
		Rev2	02.2.06		Frohn	Eichler

PROJECT NAME: ASU KOSICE

PLANT PART: LIN-PUMPS

AIR LIQUIDE

Air Liquide AGS GmbH
Fütingsweg 34
47805 Krefeld

DRAWING NAME:
LIN PUMP P71100
LIN FROM BL21002
HS 71110

SIZE: A3

FUNKTION DIAGRAM

DRWG. NO.: K70101_169.dwg

PROJ. NO.: K70101

REPLACES: REPLACED BY: BASED:

DATE: 17.06.2005
AUTHOR: Frohn
CHECK: Eichler
STD.:

Comment	Origin	Type	Signal-/TAG-No.	Path
Cacade P20001 to	Software button	1	HS 71140	4
LIN-pumps				5
Selector for cascade	Software button	0	HS 71141	6
	0=P71100			7
End pressure LIN-	P-transmitter	E	PT 71170	9
pump P71100	from page no.107/86	E	U71140	10
LIN-pump i. operation	from page no.166/85	1	P71170_A	14

Function

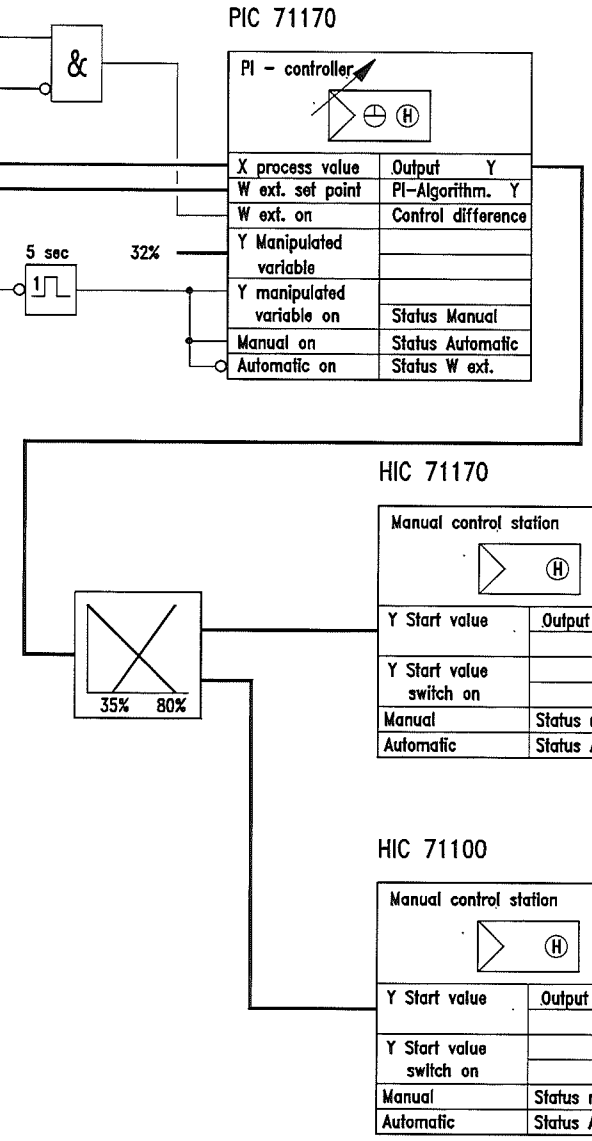

Path	Type	Signal/TAG-No.	Destination	Comment
77	E	PV 71170	Positioner 0-100%	Control valve
78			= 20-4mA	Recyeled LIN
79				product PV 71170
91	E	HC 71100	Frequency converter	Speed control
92			0-100% = 4-20mA	

JOB NO.	FILE NO.	REV.	DATE	REVISIONS	BY	CHKD.
		Rev3	08.6.07	"as built"	Frohn	Stippich
		Rev2	02.2.06		Frohn	Eichler

PROJECT NAME: ASU KOSICE

PLANT PART: LIN-PUMPS

AIR LIQUIDE

Air Liquide AGS GmbH
Fütingsweg 34
47805 Krefeld

DRAWING NAME:
LIN PUMP P71100
SPEED/PRESSURE CONTROL
PIC 71170 / HIC 71100

SIZE A3

FUNKTION DIAGRAM

DRWG. NO. K70101_170.dwg

PROJ. NO. K70101

REPLACES: REPLACED BY: BASED:

DATE 17.06.2005
AUTHOR Frohn
CHECK Eichler
STD.

Comment	Origin	Type	Signal-/TAG-No.	Path
Bearing temp. P71100	Pt100	E	T71141_I	2
Limit value	Constant	E	20.0°C	5
Limit value	Constant	E	0.0°C	10
Heating on	Check back signal	1	EH 71110	22
Reset trip heating	Software button	1	US71110_RES	40

Function

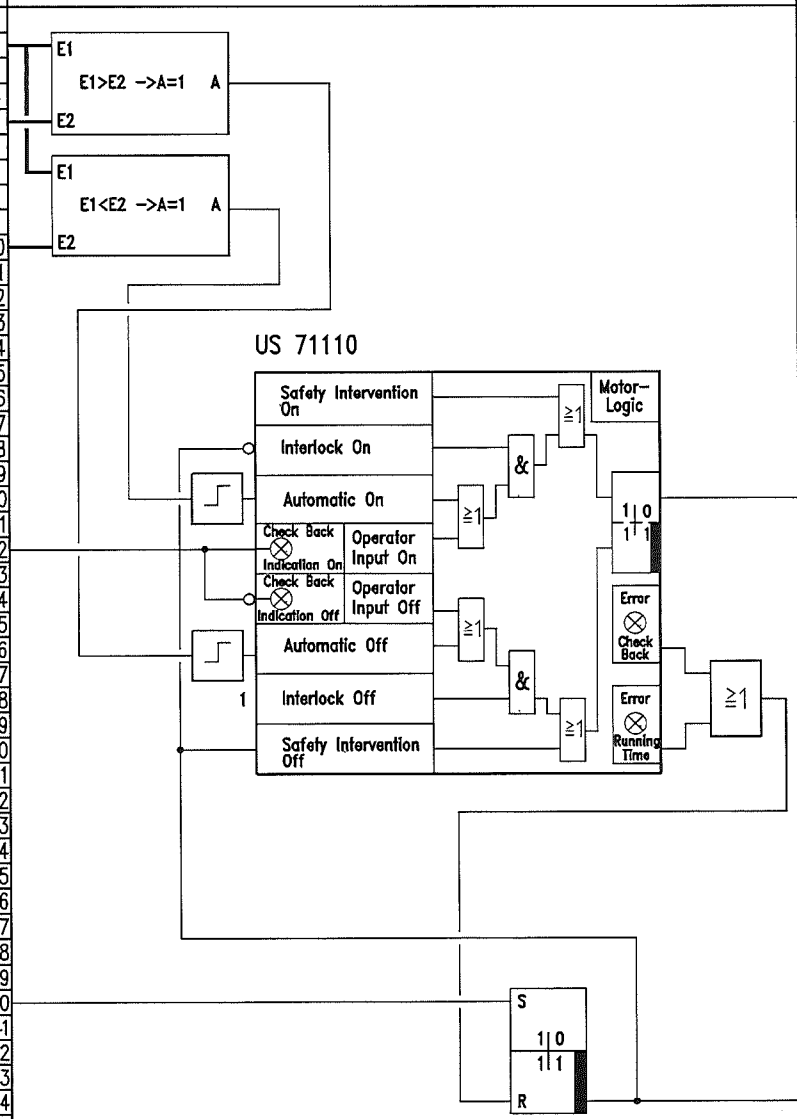

Path	Type	Signal/TAG-No.	Destination	Comment
70	1	US 71110	Signal to MCC	Heating M71110 on
94	1	US 71110_FRTFEP	Alarm OS	Heating fail

JOB NO.	FILE NO.	REV.	DATE	REVISIONS	BY	CHKD.
		Rev3	08.6.07	"as built"	Frohn	Stippich
		Rev2	02.2.06		Frohn	Eichler

PROJECT NAME: ASU KOSICE

PLANT PART: LOX-PUMPS

AIR LIQUIDE

Air Liquide AGS GmbH
Fütingsweg 34
47805 Krefeld

DRAWING NAME:
LIN PUMP P71100
BEARING HEATING M71100
US 71110

SIZE: A3

FUNKTION DIAGRAM

DRWG. NO.: K70101_171.dwg

PROJ. NO.: K70101

REPLACES: REPLACED BY: BASED:

DATE: 17.06.2005
AUTHOR: Frohn
CHECK: Eichler
STD.:

Rang.	Comment	Origin	Type	Signal-/TAG-No.	Path
					1
					2
					3
					4
					5
					6
					7
					8
					9
	Reset trip LIN-pump	Software reset button	1	HS 71200_Res	10
	P71200				11
					12
					13
	Trip cold box	from page no.101/91	1	US 20000_dyn	14
					15
					16
	GAN temp. trip	Contact < Min2	1	UA 20025	17
					18
					19
	GAN temp. trip	from page no.104/96	1	US 20025_dyn	20
					21
					22
	Fail pump	from page no.175/78	1	HS 71200_fail	23
					24
	Bearing temp.	Value < Min2	1	TLL 71240	25
					26
	Bearing temp.	Value < Min2	1	TLL 71241	27
					28
	Bearing temp.	Value > Max2	1	THH 71241	29
					30
	ESD P71100/P71200	Contct ESD-relay	0	HA 71000_1	31
					32
					33
					34
	Electrical fail	Contact	0	EA 71200	35
	frequency converter				36
					37
					38
					39
					40
	LIN-pump P71100 on	Check back signal	1	EH 71200	41
					42
	LIN behind P71100	Value < Min2	1	PLL 71270	43
					44
					45
					46
					47
					48

Function

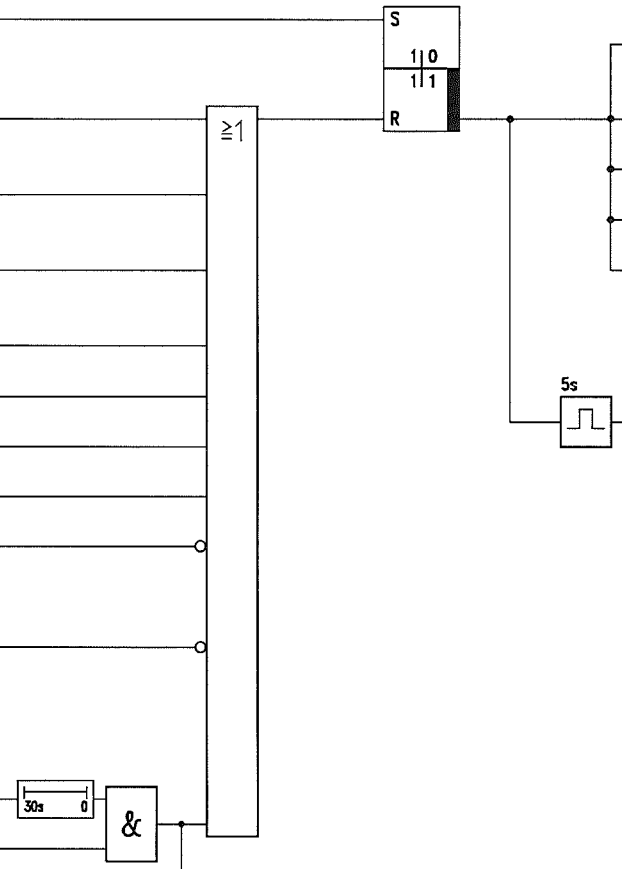

Path	Type	Signal/TAG-No.	Destination	Comment	Rang.
51					
52					
53					
54					
55					
56					
57					
58					
59					
60					
61	1	UA 71200	Alarm OS	"Trip LIN-pump P71200"	
62					
63					
64	1	US 71200	to page no. 175/40	Trip LIN-pump P71200	
65					
66	1	US 71200	to page no. 173/7	Start conditions	
67					
68	1	US 71200	to page no. 104/26	GAN-trip	
69					
70	1	US 71200	to page no 121/35	LIN-trip	
71					
72					
73					
74					
75					
76	1	US 71200_dyn	to page no. 176/39	HS71210 off	
77					
78					
79					
80					
81					
82					
83					
84					
85					
86					
87					
88					
89					
90					
91					
92					
93					
94					
95	1	PALL 71270	Alarm OS	"Pump kavitated"	
96					
97					
98					

JOB NO.	FILE NO.	REV.	DATE	REVISIONS	BY	CHKD.
		Rev3	08.6.07	"as built"	Frohn	Stippich
		Rev2	02.2.06		Frohn	Eichler

PROJECT NAME: ASU KOSICE

PLANT PART: LIN-PUMPS

AIR LIQUIDE

Air Liquide AGS GmbH
Fütingsweg 34
47805 Krefeld

DRAWING NAME: LIN PUMP P71200 TRIP US71200

SIZE: A3

FUNKTION DIAGRAM

DRWG. NO.: K70101_172.dwg

PROJ. NO.: K70101

REPLACES: REPLACED BY: BASED:

DATE: 17.06.2005
AUTHOR: Frohn
CHECK: Eichler
STD.:

Comment	Origin	Type	Signal-/TAG-No.	Path
				1
				2
				3
				4
Start cool down pump	Software switch	1	HS 71201S	5
Lock LIN-pump	from page no.175/	1	HS 71200_IL	6
Trip LIN-pump	from page no.172/66	1	US 71200	7
				8
LIN-pump off	Check back signal	0	EH 71200	9
				10
Bearing temp.	Value < Min1	1	TL 71240	11
				12
Bearing temp.	Value < Min1	1	TL 71241	13
				14
Bearing temp.	Value > Max1	1	TH 71241	15
				16
PCV 71170 open	Y > 50%	1	P 71270_Y50	17
				18
HCV 71110 closed	from page no.176/69	0	HS 71210	19
				20
Cool down pump	Value < Min	1	TL 71230	21
				22
				23
				24
				25
				26
				27
				28
				29
				30
				31
				32
				33
				34
				35
LIN-pump on	Check back signal	1	EH 71200	36
				37
				38
				39
				40
				41
				42
				43
				44
				45
				46
Start pump	Software push button	1	HS 71201_S1	47
				48

Function

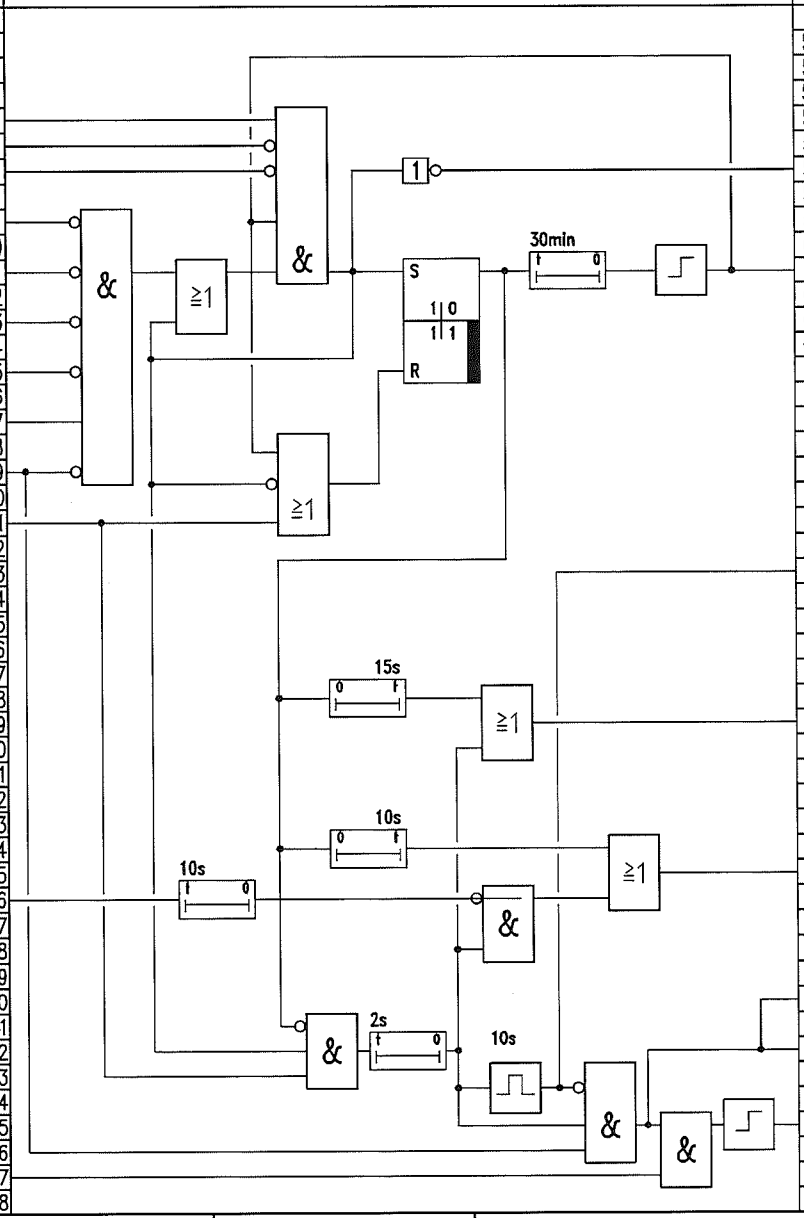

Path	Type	Signal/TAG-No.	Destination	Comment
51				
52				
53				
54				
55				
56				
57	1	UL 71200_A	to page no. 175/36	LIN-pump off from seq.
58				
59				
60				
61	1	TAH 71230	Alarm OS	"Cool down seq. fault"
62				
63				
64				
65				
66				
67				
68				
69				
70				
71				
72				
73	1	US 71203_A	to page no. 174/14	Start valve HH71203
74				
75				
76				
77				
78				
79	1	UH 71210_A	to page no. 176/27	Open HV 71210
80				
81				
82				
83				
84				
85	1	P 71270_A	to page no. 177/14	
86				
87				
88				
89				
90	1	UOH 71201	Monitoring OS	"LIN-Pump ready to
91				start"
92	1	UH 71201	to page no. 175/28	Ready to start
93				
94				
95	1	UH 71200_A	to page no. 175/30	LIN-pump on from
96				sequence
97				
98				

JOB NO.	FILE NO	REV.	DATE	REVISIONS	BY	CHKD.
		Rev3	08.6.07	"as built"	Frohn	Stippich
		Rev2	02.2.06		Frohn	Eichler

PROJECT NAME: ASU KOSICE

PLANT PART: LIN-PUMPS

AIR LIQUIDE

Air Liquide AGS GmbH
Fütingsweg 34
47805 Krefeld

DRAWING NAME: LIN PUMP P71200 START SEQUENCE US71201

SIZE: A3

FUNKTION DIAGRAM

DRWG. NO.: K70101_173.dwg

PROJ. NO.: K70101

REPLACES: REPLACED BY: BASED:

DATE: 17.06.2005
AUTHOR: Frohn
CHECK: Eichler
STD.:

Comment	Origin	Type	Signal-/TAG-No.	Path
				1
				2
				3
				4
				5
				6
				7
				8
				9
				10
				11
				12
				13
Start sequence	from page no.173/73	1	US 71103_A	14
				15
				16
				17
				18
				19
				20
				21
				22
				23
				24
				25
				26
				27
				28
				29
				30
				31
				32
				33
				34
				35
				36
				37
				38
				39
				40
				41
				42
				43
				44
				45
				46
				47
				48

Function

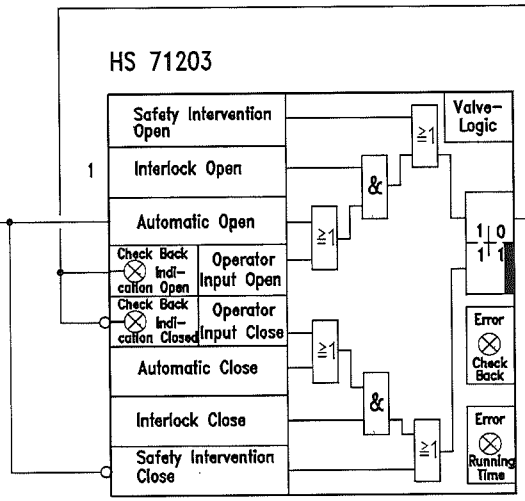

Path	Type	Signal/TAG-No.	Destination	Comment
51				
52				
53				
54				
55				
56				
57				
58				
59				
60				
61				
62				
63				
64	1	HS 71203	Solenoid valve	Open start ball valve
65				HH 71203
66				
67				
68				
69				
70				
71				
72				
73				
74				
75				
76				
77				
78				
79				
80				
81				
82				
83				
84				
85				
86				
87				
88				
89				
90				
91				
92				
93				
94				
95				
96				
97				
98				

JOB NO.	FILE NO.	REV.	DATE	REVISIONS	BY	CHKD.
		Rev3	08.6.07	"as built"	Frohn	Stippich
		Rev2	02.2.06		Frohn	Eichler

PROJECT NAME: ASU KOSICE

PLANT PART: LIN-PUMPS

AIR LIQUIDE

Air Liquide AGS GmbH
Fütingsweg 34
47805 Krefeld

DRAWING NAME:
LIN PUMP P71200
START BALL VALVE HS71203

SIZE: A3

FUNKTION DIAGRAM

DRWG. NO.: K70101_174.dwg

PROJ. NO.: K70101

REPLACES: REPLACED BY: BASED:

DATE: 17.06.2005
AUTHOR: Frohn
CHECK: Eichler
STD.:

Comment	Origin	Type	Signal-/TAG-No.	Path
Ready to start	from page no.173/92	1	US 71201	18
Pump on from seq.	from page no.173/95	1	UH 71200_A	20
LIN-pump on	Check back signal	1	EH 71200	22
Pump off from seq.	from page no.173/57	1	UL 71200_A	26
Trip LIN-Pump	from page no.172/64	1	US 71200	30
Reset trip LIN-pump	Software button	1	HS71200_RES	40
FreqC M71200 fault	Contact	0	EA 71200	44

Function

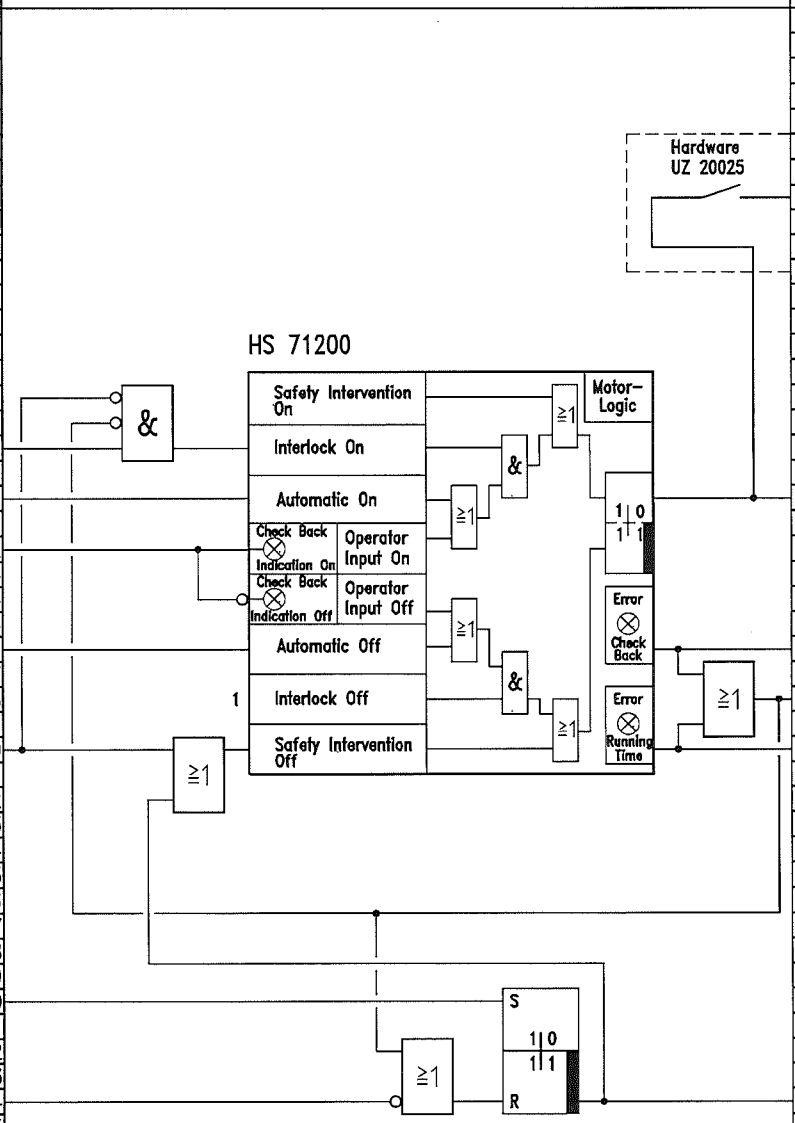

Path	Type	Signal/TAG-No.	Destination	Comment
58	1	HS 71200	Signal to MCC	Frequency converter
59				LOX-pump P71200 on
70	1	HS 71200		
76	1	HS 71200_CB	Alarm OS	"Check back error"
78	1	HS 71200_fail	to page no. 172/23	LIN-pump fail
80	1	HS 71200_RT	Alarm OS	"Running time error"
94	1	HS71200_IL	to page no. 173/6	Lock LIN-pump

JOB NO.	FILE NO.	REV.	DATE	REVISIONS	BY	CHKD.
		Rev3	08.6.07	"as built"	Frohn	Stippich
		Rev2	02.2.06		Frohn	Eichler

PROJECT NAME: ASU KOSICE

PLANT PART: LIN-PUMPS

AIR LIQUIDE

Air Liquide AGS GmbH
Fütingsweg 34
47805 Krefeld

DRAWING NAME: LIN PUMP P71200 HS 71200

SIZE: A3

FUNKTION DIAGRAM

DRWG. NO.: K70101_175.dwg

PROJ. NO.: K70101

REPLACES: REPLACED BY: BASED:

DATE: 17.06.2005
AUTHOR: Frohn
CHECK: Eichler
STD.:

Comment	Origin	Type	Signal-/TAG-No.	Path
Open from sequence	from page no.173/79	1	UH 71210_A	27
Trip LIN-pump	from page no.172/76	1	US 71200_dyn	39
LIN-pump off	Check back signal	0	EH 71200	41
Trip coldbox	from page no.101/92	1	US 20000_dyn	43

Function

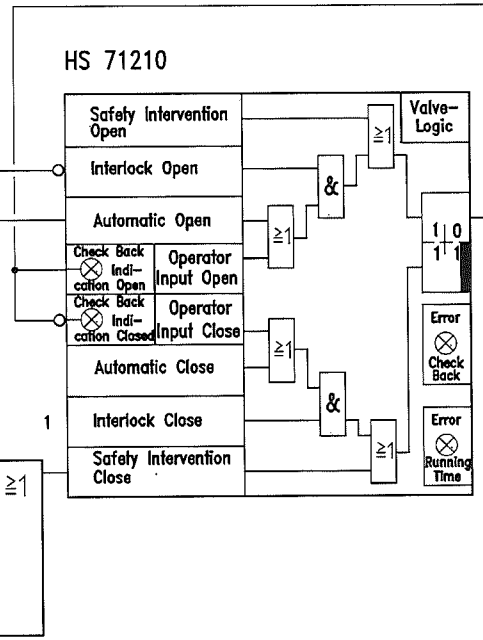

Path	Type	Signal/TAG-No.	Destination	Comment
69	0	US 71210	to page no. 173/19	Start conditions
77	1	US 71210	Solenoid valve	Open valve HV71210
78				LIN from B21002

JOB NO.	FILE NO.	REV.	DATE	REVISIONS	BY	CHKD.
		Rev3	08.6.07	"as built"	Frohn	Stippich
		Rev2	02.2.06		Frohn	Eichler

PROJECT NAME: ASU KOSICE

PLANT PART: LIN-PUMPS

AIR LIQUIDE

Air Liquide AGS GmbH
Fütingsweg 34
47805 Krefeld

DRAWING NAME:
LIN PUMP P71200
LIN FROM BL21002
HS 71210

SIZE: A3 | FUNKTION DIAGRAM

DRWG. NO.: K70101_176.dwg

PROJ. NO.: K70101

REPLACES: | REPLACED BY: | BASED:

DATE: 17.06.2005
AUTHOR: Frohn
CHECK: Eichler
STD.:

Comment	Origin	Type	Signal-/TAG-No.	Path
Cacade P20001 to LIN-pumps	Software button	1	HS 71140	4
Selector for cascade	Software button 1=P71200	1	HS 71141	6
End pressure LINX-pump P71200	P-transmitter from page no.107/90	E	PT 71270	9
		E	PIC20002_Y	10
LIN-pump i. operation	from page no.173/85	1	P71270_Y60	14

Function

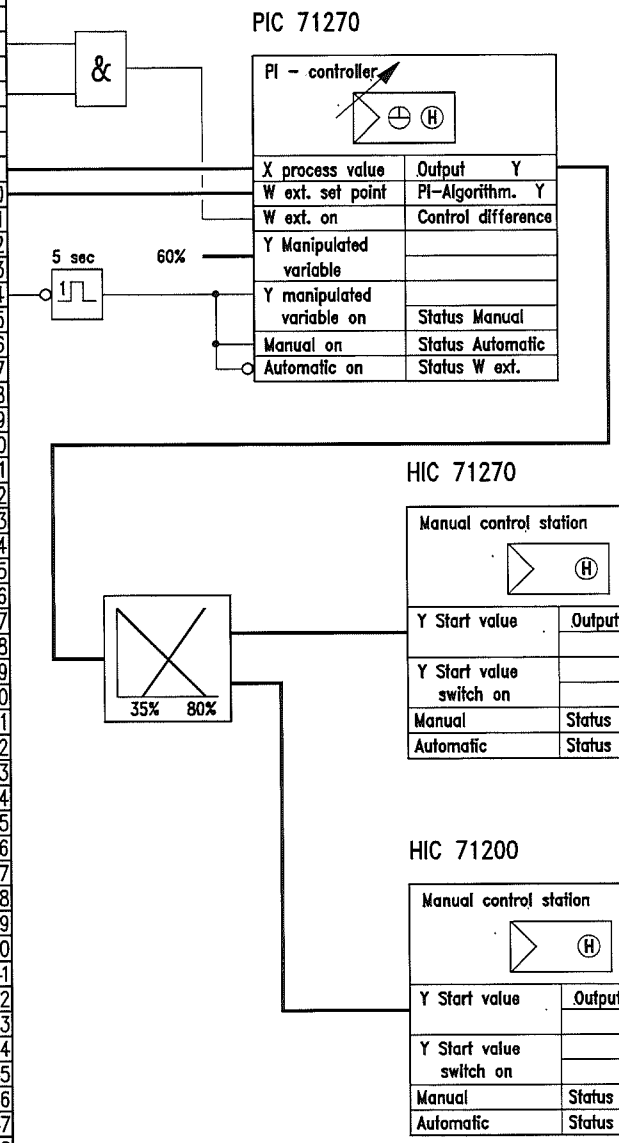

Path	Type	Signal/TAG-No.	Destination	Comment
77	E	PV 71270	Positioner 0-100% = 20-4mA	Control valve Recyeled LIN product PV 71270
91	E	HC 71200	Frequency converter 0-100% = 4-20mA	Speed control

JOB NO.	FILE NO	REV.	DATE	REVISIONS	BY	CHKD.
		Rev3	08.6.07	"as built"	Frohn	Stippich
		Rev2	02.2.06		Frohn	Eichler

PROJECT NAME: ASU KOSICE

PLANT PART: LIN-PUMPS

AIR LIQUIDE

Air Liquide AGS GmbH
Fütingsweg 34
47805 Krefeld

DRAWING NAME: LIN PUMP P71200
SPEED/PRESSURE CONTROL
PIC 71270 / HIC 71200

SIZE: A3 — FUNKTION DIAGRAM

DRWG. NO.: K70101_177.dwg

PROJ. NO.: K70101

REPLACES: REPLACED BY: BASED:

DATE: 17.06.2005
AUTHOR: Frohn
CHECK: Eichler
STD.:

Comment	Origin	Type	Signal-/TAG-No.	Path
Bearing temp. P71200	Pt100	E	T71241_I	2
Limit value	Constant	E	20.0°C	5
Limit value	Constant	E	0.0°C	10
Heating on	Check back signal	1	EH 71210	22
Reset trip heating	Software button	1	US71210_RES	40

Function

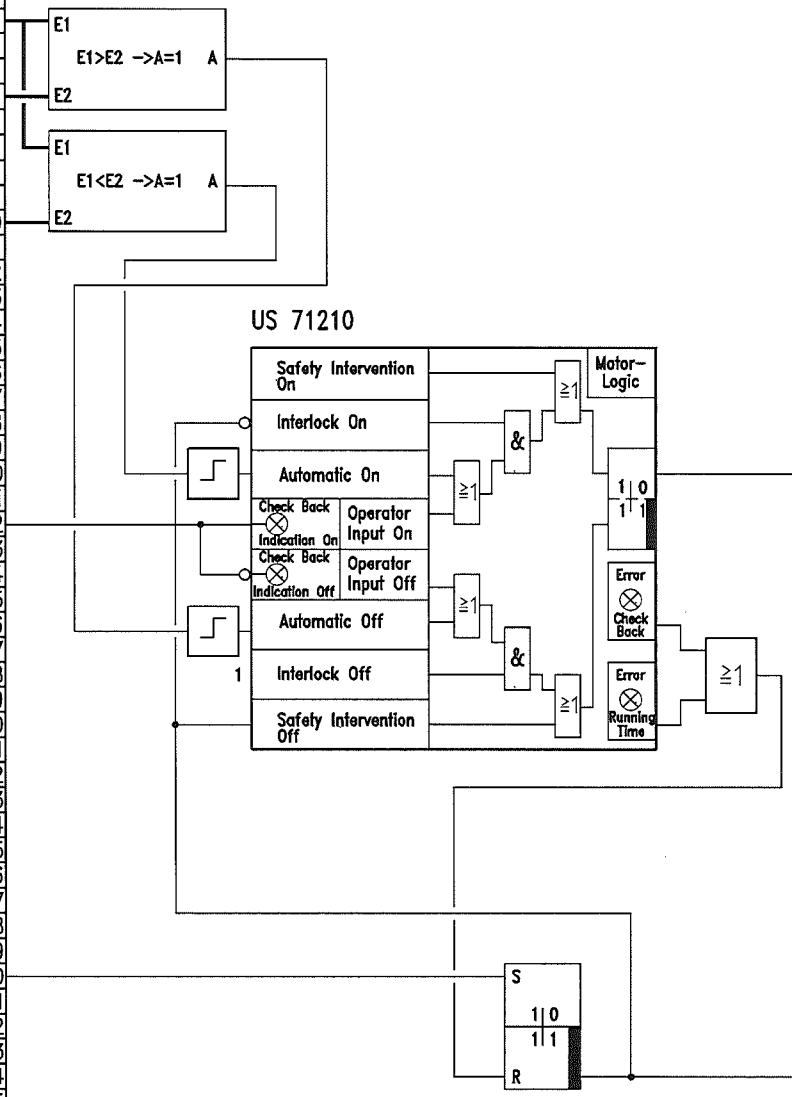

Path	Type	Signal/TAG-No.	Destination	Comment
70	1	US 71210	Signal to MCC	Heating M71110 on
94	1	US 71210_FRTFEP	Alarm OS	Heating fail

JOB NO.	FILE NO	REV.	DATE	REVISIONS	BY	CHKD.
		Rev3	08.6.07	"as built"	Frohn	Stippich
		Rev2	02.2.06		Frohn	Eichler

PROJECT NAME: ASU KOSICE

PLANT PART: LOX-PUMPS

AIR LIQUIDE

Air Liquide AGS GmbH
Fütingsweg 34
47805 Krefeld

DRAWING NAME: LIN PUMP P71200 BEARING HEATING M71200 US 71210

SIZE: A3

FUNKTION DIAGRAM

DRWG. NO.: K70101_178.dwg

PROJ. NO.: K70101

REPLACES: REPLACED BY: BASED:

DATE: 17.06.2005
AUTHOR: Frohn
CHECK: Eichler
STD.:

Comment	Origin	Type	Signal-/TAG-No.	Path	Function	Path	Type	Signal/TAG-No.	Destination	Comment
				1		51				
				2		52				
				3		53				
				4		54				
				5		55				
				6		56				
				7		57				
				8		58				
				9		59				
				10		60				
				11		61				
				12		62				
				13		63				
				14		64				
				15		65				
				16		66				
				17		67				
				18		68				
				19		69				
				20		70				
				21		71				
				22		72				
				23		73				
				24		74				
				25		75				
				26		76				
				27		77				
				28		78				
				29		79				
				30		80				
				31		81				
				32		82				
				33		83				
				34		84				
				35		85				
				36		86				
				37		87				
				38		88				
				39		89				
				40		90				
				41		91				
				42		92				
				43		93				
				44		94				
				45		95				
				46		96				
				47		97				
				48		98				

JOB NO.	FILE NO.	REV.	DATE	REVISIONS	BY	CHKD.
		Rev3	08.6.07	"as built"	Frohn	Stippich
		Rev2	02.2.06		Frohn	Eichler

PROJECT NAME: ASU KOSICE

PLANT PART: LIN-PUMPS

AIR LIQUIDE

Air Liquide AGS GmbH
Fütingsweg 34
47805 Krefeld

DRAWING NAME: LIN PUMP P72100 SPARE

SIZE	A3	FUNKTION DIAGRAM	DATE 17.06.2005
			AUTHOR Frohn
			CHECK Eichler
			STD.
DRWG. NO.	K70101_179.dwg		
PROJ. NO.	K70101		Page no. 179
			OF 230 Pages
REPLACES:		REPLACED BY:	BASED:

Comment	Origin	Type	Signal-/TAG-No.	Path	Function	Path	Type	Signal/TAG-No.	Destination	Comment
				1		51				
				2		52				
				3		53				
				4		54				
				5		55				
				6		56				
				7		57				
				8		58				
				9		59				
				10		60				
				11		61				
				12		62				
				13		63				
				14		64				
				15		65				
				16		66				
				17		67				
				18		68				
				19		69				
				20		70				
				21		71				
				22		72				
				23		73				
				24		74				
				25		75				
				26		76				
				27		77				
				28		78				
				29		79				
				30		80				
				31		81				
				32		82				
				33		83				
				34		84				
				35		85				
				36		86				
				37		87				
				38		88				
				39		89				
				40		90				
				41		91				
				42		92				
				43		93				
				44		94				
				45		95				
				46		96				
				47		97				
				48		98				

JOB NO.	FILE NO.	REV.	DATE	REVISIONS	BY	CHKD.
		Rev3	08.6.07	"as built"	Frohn	Stippich
		Rev2	02.2.06		Frohn	Eichler

PROJECT NAME: ASU KOSICE

PLANT PART: DUMP VAPORIZER

AIR LIQUIDE

Air Liquide AGS GmbH
Fütingsweg 34
47805 Krefeld

DRAWING NAME: SPARE

SIZE	A3	FUNKTION DIAGRAM	DATE 17.06.2005
			AUTHOR Frohn
			CHECK Eichler
			STD.
DRWG. NO.	K70101_180.dwg		
PROJ. NO.	K70101		Page no. 180
			OF 230 Pages
REPLACES:		REPLACED BY:	BASED:

Comment	Origin	Type	Signal-/TAG-No.	Path
Trip LIN-product	fr. page no. 121/86	1	US 23013	20
Outlet dump	Value < Min2	1	TLL 90010	30
Dump vaporizer	Value < Min2	1	TLL 90013	32

Function

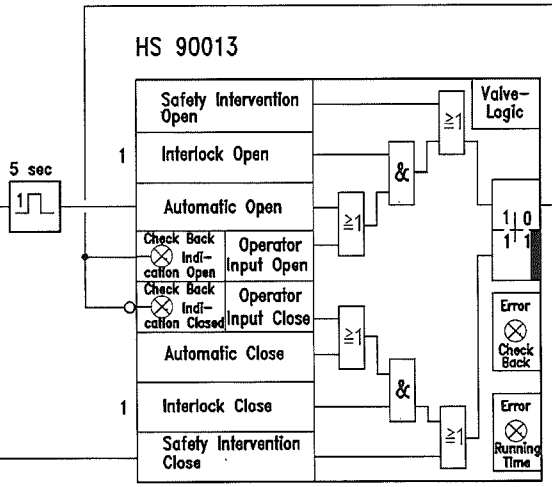

Path	Type	Signal/TAG-No.	Destination	Comment
70	1	HS 90013	Solenoid valve	Open drain valve
71				HV 90013

JOB NO.	FILE NO	REV	DATE	REVISIONS	BY	CHKD.
		Rev3	08.6.07	"as built"	Frohn	Stippich
		Rev2	02.2.06		Frohn	Eichler

PROJECT NAME: ASU KOSICE

PLANT PART: DUMP VAPORIZER

AIR LIQUIDE

Air Liquide AGS GmbH
Fütingsweg 34
47805 Krefeld

DRAWING NAME: DUMP VAPORIZER DRAIN LIN HS 90013

SIZE: A3 — FUNKTION DIAGRAM

DRWG. NO.: K70101_181.dwg

PROJ. NO.: K70101

REPLACES: REPLACED BY: BASED:

DATE: 17.06.2005
AUTHOR: Frohn
CHECK: Eichler
STD.:

Comment	Origin	Type	Signal-/TAG-No.	Path
Trip LOX-product	from page no.120/86	1	US 22001	20
Outlet dump	Value < Min2	1	TLL 90010	30
Dump vaporizer	Value < Min2	1	TLL 90013	32

Function

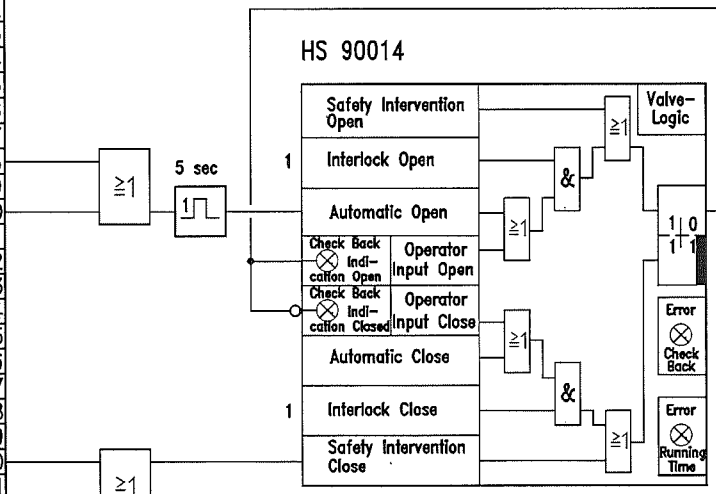

Path	Type	Signal/TAG-No.	Destination	Comment
70	1	HS 90014	Solenoid valve	Open drain valve
71				HV 90014

Rev3	08.6.07	"as built"	Frohn	Stippich
Rev2	02.2.06		Frohn	Eichler
JOB NO.	FILE NO.	REV.	DATE	REVISIONS	BY	CHKD.

PROJECT NAME: ASU KOSICE

PLANT PART: DUMP VAPORIZER

AIR LIQUIDE

Air Liquide AGS GmbH
Fütingsweg 34
47805 Krefeld

DRAWING NAME: DUMP VAPORIZER DRAIN LOX HS 90014

SIZE: A3

FUNKTION DIAGRAM

DRWG. NO.: K70101_182.dwg

PROJ. NO.: K70101

REPLACES: REPLACED BY: BASED:

DATE: 17.06.2005
AUTHOR: Frohn
CHECK: Eichler
STD.:

Comment	Origin	Type	Signal-/TAG-No.	Path
Trip LAr-product	from page no.148/77	1	US 43023	20
Outlet dump	Value < Min2	1	TLL 90010	30
Dump vaporizer	Value < Min2	1	TLL 90013	32

Function

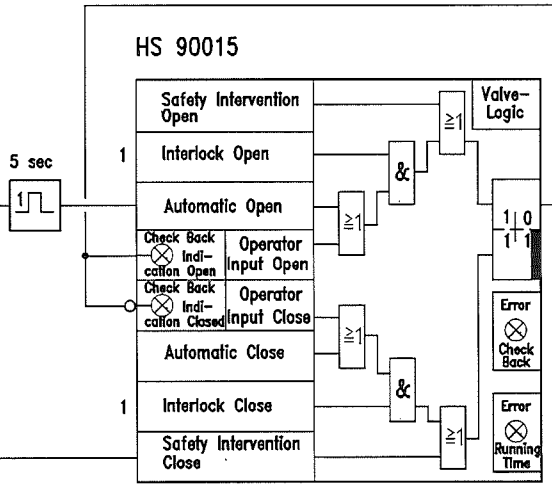

Path	Type	Signal/TAG-No.	Destination	Comment
70	1	HS 90015	Solenoid valve	Open drain valve
71				HV 90015

Rev3	08.6.07	"as built"	Frohn	Stippich
Rev2	02.2.06		Frohn	Eichler
JOB NO.	FILE NO	REV.	DATE	REVISIONS	BY	CHKD.

PROJECT NAME: ASU KOSICE

PLANT PART: DUMP VAPORIZER

AIR LIQUIDE

Air Liquide AGS GmbH
Fütingsweg 34
47805 Krefeld

DRAWING NAME: DUMP VAPORIZER DRAIN LAr HS 90015

SIZE A3 | FUNKTION DIAGRAM

DRWG. NO. K70101_183.dwg

PROJ. NO. K70101

REPLACES: | REPLACED BY: | BASED:

DATE 17.06.2005
AUTHOR Frohn
CHECK Eichler
STD.

Comment	Origin	Type	Signal-/TAG-No.	Path
Dump vaporizer	Pt100	E	TE 90008	10
Trip LOX-product	from page no.120/84	1	US 22001	18
Trip LIN-product	from page no.121/84	1	US 23013	20
Trip LAr-product	from page no.148/75	1	US 43023	22

Function

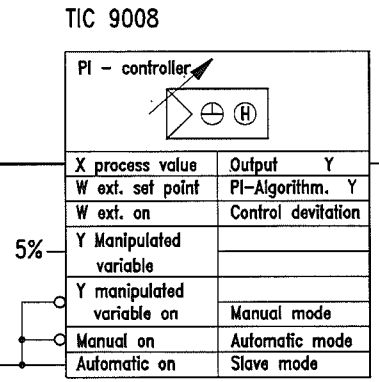

Path	Type	Signal/TAG-No.	Destination	Comment
60	E	TV 90004	Positioner 0-100% = 4..20mA	Steam to vaporizer

JOB NO.	FILE NO	REV.	DATE	REVISIONS	BY	CHKD.
		Rev3	08.6.07	"as built"	Frohn	Stippich
		Rev2	02.2.06		Frohn	Eichler

PROJECT NAME: ASU KOSICE

PLANT PART: DUMP VAPORIZER

AIR LIQUIDE

Air Liquide AGS GmbH
Fütingsweg 34
47805 Krefeld

DRAWING NAME: DUMP VAPORIZER STEAM CONTROLER TIC 90008

SIZE A3 | FUNKTION DIAGRAM

DRWG. NO. K70101_184.dwg

PROJ. NO. K70101

REPLACES: | REPLACED BY: | BASED:

DATE 17.06.2005
AUTHOR Frohn
CHECK Eichler
STD.

Comment	Origin	Type	Signal-/TAG-No.	Path	Function	Path	Type	Signal/TAG-No.	Destination	Comment
				1	Pages no. 185 to no. 200: Spare!	51				
				2		52				
				3		53				
				4		54				
				5		55				
				6		56				
				7		57				
				8		58				
				9		59				
				10		60				
				11		61				
				12		62				
				13		63				
				14		64				
				15		65				
				16		66				
				17		67				
				18		68				
				19		69				
				20		70				
				21		71				
				22		72				
				23		73				
				24		74				
				25		75				
				26		76				
				27		77				
				28		78				
				29		79				
				30		80				
				31		81				
				32		82				
				33		83				
				34		84				
				35		85				
				36		86				
				37		87				
				38		88				
				39		89				
				40		90				
				41		91				
				42		92				
				43		93				
				44		94				
				45		95				
				46		96				
				47		97				
				48		98				

JOB NO.	FILE NO	REV.	DATE	REVISIONS	BY	CHKD.
		Rev3	08.6.07	"as built"	Frohn	Stippich
		Rev2	02.2.06		Frohn	Eichler

PROJECT NAME: ASU KOSICE

PLANT PART:

AIR LIQUIDE

Air Liquide AGS GmbH
Fütingsweg 34
47805 Krefeld

DRAWING NAME: SPARE

SIZE: A3

FUNKTION DIAGRAM

DRWG. NO.: K70101_180.dwg

PROJ. NO.: K70101

REPLACES: REPLACED BY:

DATE: 17.06.2005
AUTHOR: Frohn
CHECK: Eichler
STD.:

Page no. 185-200
Of 230 Pages

BASED:

Comment	Origin	Type	Signal-/TAG-No.	Path
NC1 main drive	Check back signal	1	EH 70001	4
Reset trip NC1	Reset button OS	1	HS 70000	15
Ready to start NC1	fr. page no. 205/70	1	UH 70003	32
Trip NC1 compr.	fr. page no. 202/57	1	US 70000	44

Function

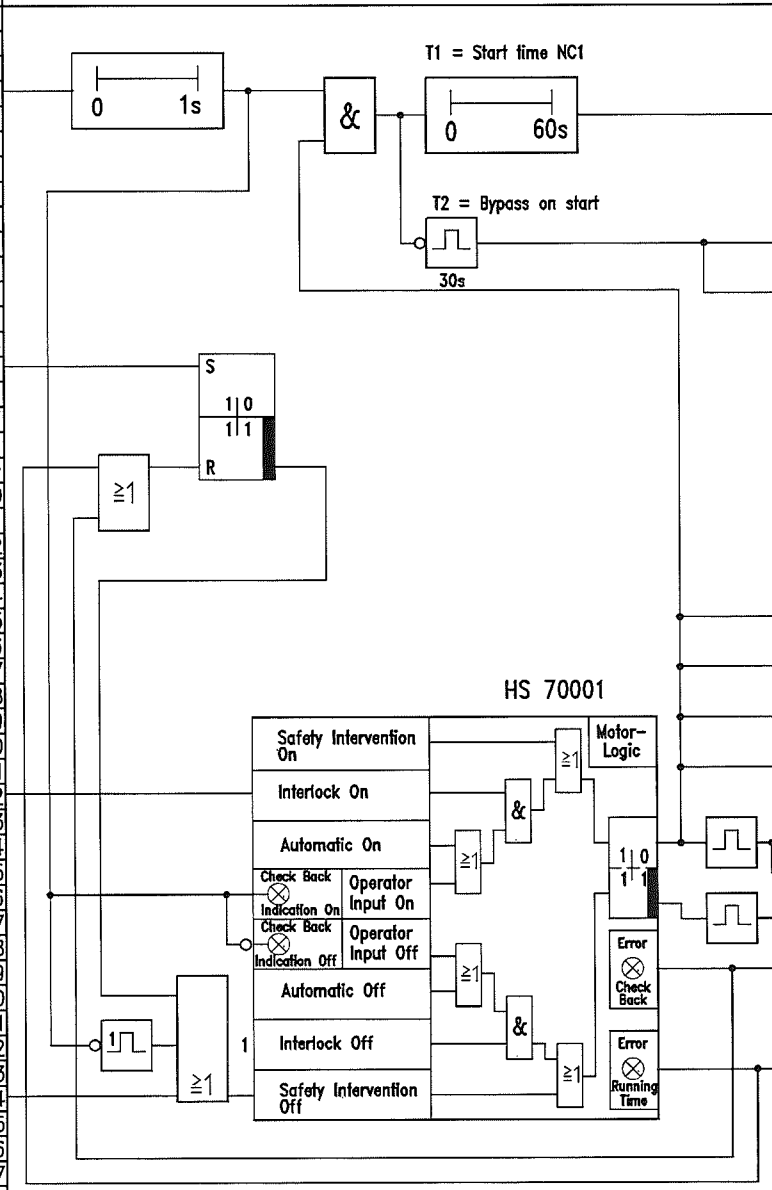

Path	Type	Signal/TAG-No.	Destination	Comment
55	1	EH 70001_del	to page no. 210/34	
60	1	US 70700	Factor 3	Trip multiplier
62	0	US 70700	Factor 1	limit for vibrations
75	0	US 70001	to page no. 210/5	Open recyclef valve
77	0	US 70001	to page no. 211/5	FV 70074 Open blow off valve
79	1	US 70001	Signal to MCC	HV 70035 Motor heating off
81	1	US 70001	Signal to MCC	US 70706 NC1 main drive on
84	1	HH 70001	Motor starter	On signal motor NC1
85	1		to page no. 203/5	
87	1	HL 70001	Motor starter	Off signal motor NC1
89	1	HS 70001_CB	Alarm OS	"Check back error" NC1
93	1	HS 70001_RT	Alarm OS	"Running time error" NC1

JOB NO.	FILE NO.	REV.	DATE	REVISIONS	BY	CHKD.
		Rev3	08.6.07	"as built"	Frohn	Stippich
		Rev2	02.2.06		Frohn	Eichler

PROJECT NAME: ASU KOSICE

PLANT PART: NITROGEN COMPRESSORS

AIR LIQUIDE

Air Liquide AGS GmbH
Fütingsweg 34
47805 Krefeld

DRAWING NAME: N2 COMPRESSOR 1 MAIN DRIVE HS70001

SIZE: A3

FUNKTION DIAGRAM

DRWG. NO.: K70101_201.dwg

PROJ. NO.: K70101

REPLACES: REPLACED BY: BASED:

DATE: 17.06.2005
AUTHOR: Frohn
CHECK: Eichler
STD.:

Page no. 201 Of 230 Pages

Comment	Origin	Type	Signal-/TAG-No.	Path
				1
				2
Reset Trip NC1	Software reset button	1	HS 70000	3
				4
Main motor NC1 off	fr. page no. 203/55	0	EH70001_dyn	5
				6
Oil temp. NC1	Value > Max2	1	THH 70854	7
				8
Oil pressure NC1	Value < Min2	1	PLL 70854	9
				10
				11
				12
Axial displacement	Value > Max2	1	GHH 70738	13
Axial displacement	Value > Max2	1	GHH 70743	14
				15
Vibration 1st stage	Value > Max2	1	XHH 70736	16
Vibration 2nd stage	Value > Max2	1	XHH 70738	17
Vibration 3rd stage	Value > Max2	1	XHH 70740	18
Vibration free shaft	Value > Max2	1	XHH 70742	19
				20
Bearing 1.stage rad.	Value > Max2	1	THH 70736	21
Bearing 1.stage ax.	Value > Max2	1	THH 70737	22
Bearing 2.stage rad.	Value > Max2	1	THH 70738	23
Bearing 2.stage ax.	Value > Max2	1	THH 70739	24
Bearing 3.stage rad.	Value > Max2	1	THH 70740	25
Bearing 3.stage ax.	Value > Max2	1	THH 70741	26
Bearing 4.stage rad.	Value > Max2	1	THH 70742	27
Bearing 4.stage ax.	Value > Max2	1	THH 70743	28
				29
				30
				31
				32
				33
				34
				35
				36
				37
				38
				39
				40
				41
				42
Motor winding U	Value > Max2	1	THH 70715	43
Motor winding V	Value > Max2	1	THH 70718	44
Motor winding W	Value > Max2	1	THH 70721	45
				46
Trip conditions MAC	fr. page no. 203/79	1	US 70000_1	47
				48

Function

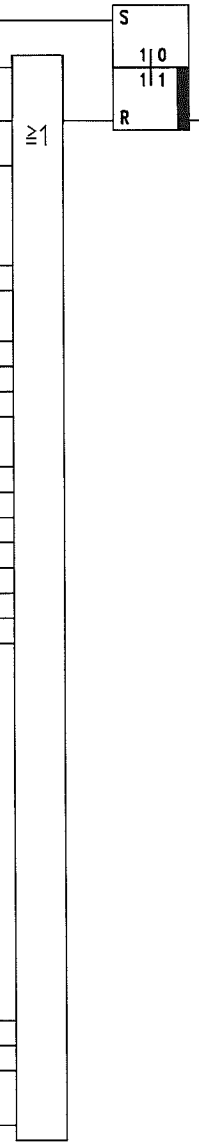

Path	Type	Signal/TAG-No.	Destination	Comment
51				
52				
53				
54	1	UA 70000	Alarm OS	Trip NC1
55				
56				
57	1	US 70000	to page no. 201/44	Trip N2 compressor 1
58				
59	1	US 70000	to page no. 205/23	Ready to start
60				UH 70003
61	1	US 70000	to page no. 210/7	Open recycle valve
62				UV 70074
63	1	US 70000	to page no. 211/7	Open blow off valve
64				UV 70035
65	1	US 70000	to page no. 214/28	Open blow off valve
66				HV 70035
67	1	US 70000	HIC70036, Y=0%	Close MP-GAN
68				HK 70036
69				
70				
71				
72				
73				
74				
75				
76				
77				
78				
79				
80				
81				
82				
83				
84				
85				
86				
87				
88				
89				
90				
91				
92				
93				
94				
95				
96				
97				
98				

JOB NO.	FILE NO	REV.	DATE	REVISIONS	BY	CHKD.
		Rev3	08.6.07	"as built"	Frohn	Stippich
		Rev2	02.2.06		Frohn	Eichler

PROJECT NAME: ASU KOSICE

PLANT PART: NITROGEN COMPRESSORS

AIR LIQUIDE

Air Liquide AGS GmbH
Fütingsweg 34
47805 Krefeld

DRAWING NAME:
N2 COMPRESSOR 1
Trip NC1 US70000

SIZE	A3	FUNKTION DIAGRAM	DATE 17.06.2005
			AUTHOR Frohn
			CHECK Eichler
DRWG. NO.	K70101_202.dwg		STD.
PROJ. NO.	K70101		Page no.202
			OF 230 Pages
REPLACES:		REPLACED BY:	BASED: